896340
Valley Copper

KEY TO FIGURES 1-7

FIGURE 1	FIGURE 2	FIGURE 3	FIGURE 4	FIGURE 5	FIGURE 6	FIGURE 7
GEOLOGY	COPPER ASSAY	ARGILLIC ALTERATION	PERVASIVE SERICITE	VEIN SERICITE	POTASSIUM FELDSPAR	SULFIDE DISTRIBUTION

PPB PORPHYRITIC PHASE OF BETHSAIDA GRANODIORITE
TFP TAN FELSITE PORPHYRY
L LAMPROPHYRE
G GYPSUM VEIN LINE
A ANHYDRITE LINE
V VUG LINE

..A..

COPPER AND ALTERATION RELATIVE INTENSITIES

WITHIN HOLES

- WEAK
- WEAK-MODERATE
- MODERATE
- MODERATE-INTENSE
- INTENSE

BETWEEN HOLES

- BLANK
- WEAK
- MODERATE
- INTENSE

BN : CPY

BN<<CPY	<1:8	
BN < CPY	1:4-8	
BN = CPY	2:1-1:2	
BN > CPY	4-8:1	BN > CPY
BN>> CPY	> 8:1	

CHALCOCITE IN HOLES CONNECTED BY LINE

P PYRITE ON SIDE OF LINE WITH P

M MOLYBDENITE ON SIDE OF LINE WITH M

SPH SPHALERITE IN HOLE

FIGURES 1-7

B1 B2 B3 BARREN QUARTZ HORIZONS

LOW GRADE COPPER

HIGH GRADE COPPER

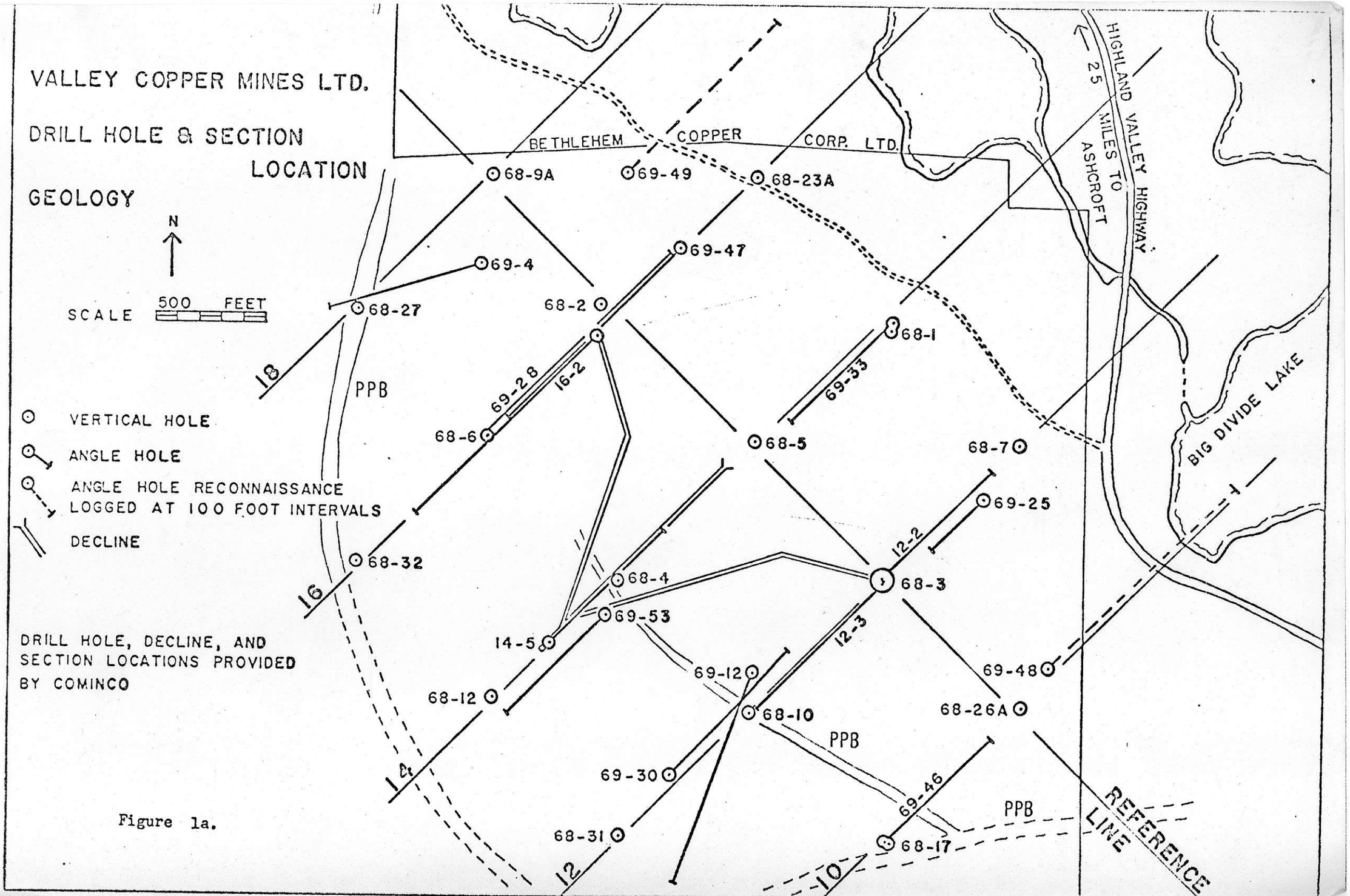
VALLEY COPPER MINES LTD.
DRILL HOLE & SECTION LOCATION
GEOLOGY
N
SCALE 500 FEET
VERTICAL HOLE
ANGLE HOLE
ANGLE HOLE RECONNAISSANCE LOGGED AT 100 FOOT INTERVALS
DECLINE
DRILL HOLE, DECLINE, AND SECTION LOCATIONS PROVIDED BY COMINCO
BETHLEHEM COPPER CORP. LTD.
HIGHLAND VALLEY HIGHWAY
25 MILES TO ASHCROFT
BIG DIVIDE LAKE
REFERENCE LINE
PPB
68-9A
69-49
68-23A
69-47
69-4
68-27
68-2
68-1
69-28
16-2
69-33
68-6
68-5
68-7
69-25
68-32
68-4
12-2
68-3
69-53
14-5
12-3
69-12
69-48
68-12
68-10
68-26A
69-30
69-46
68-31
68-17
18
16
14
12
10

Figure 1a.

SECTION 12 GEOLOGY

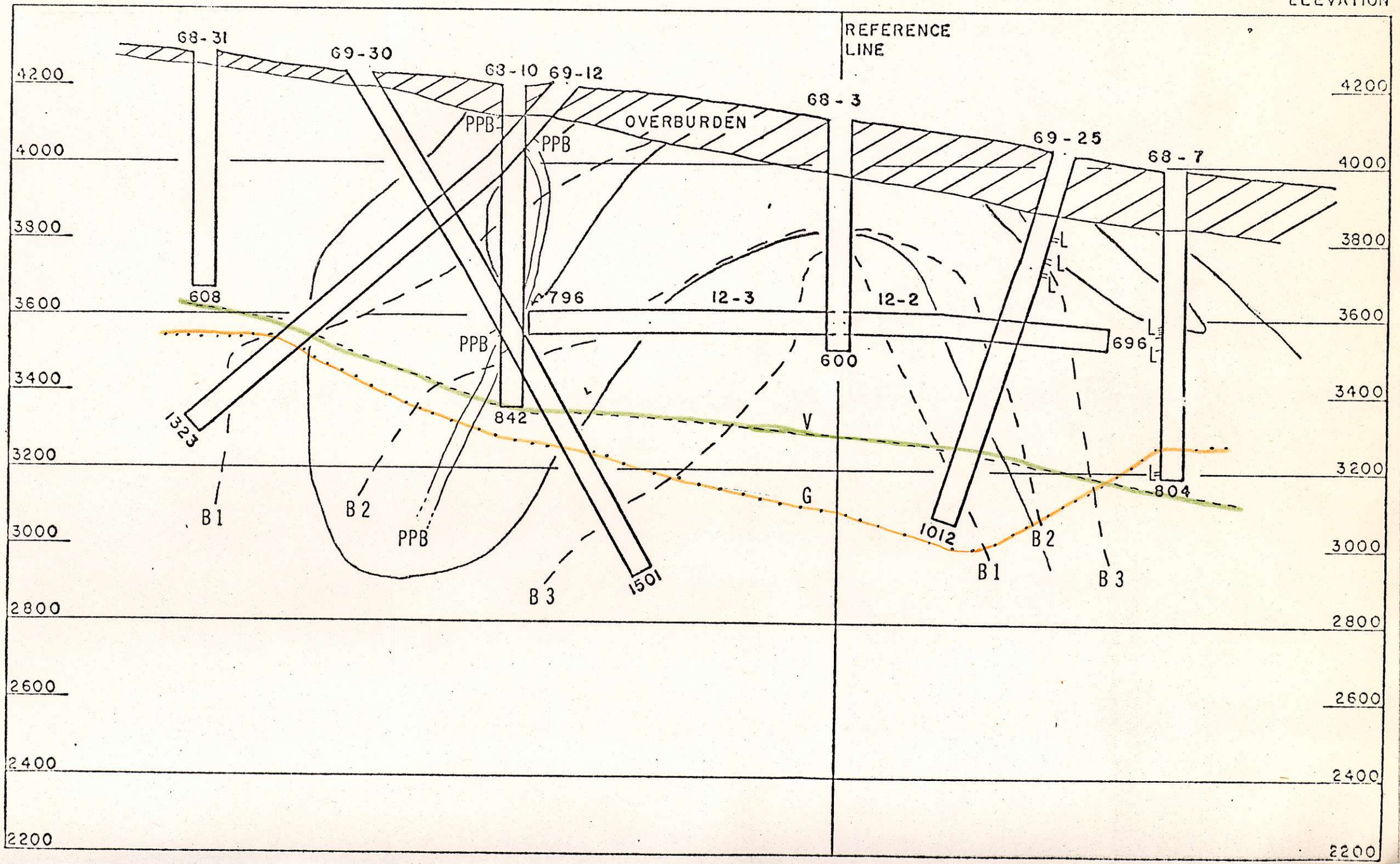

SECTION 16 GEOLOGY

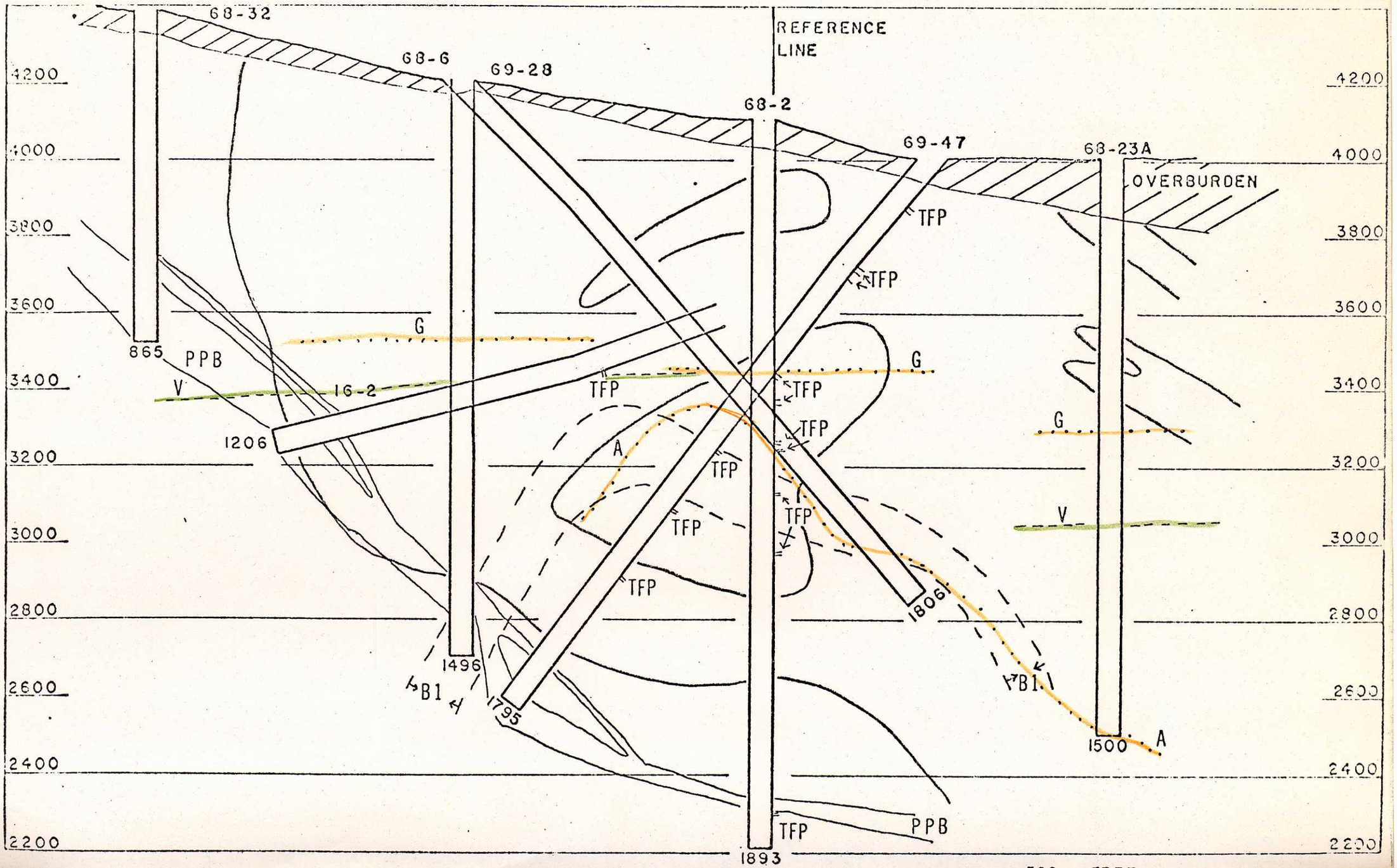

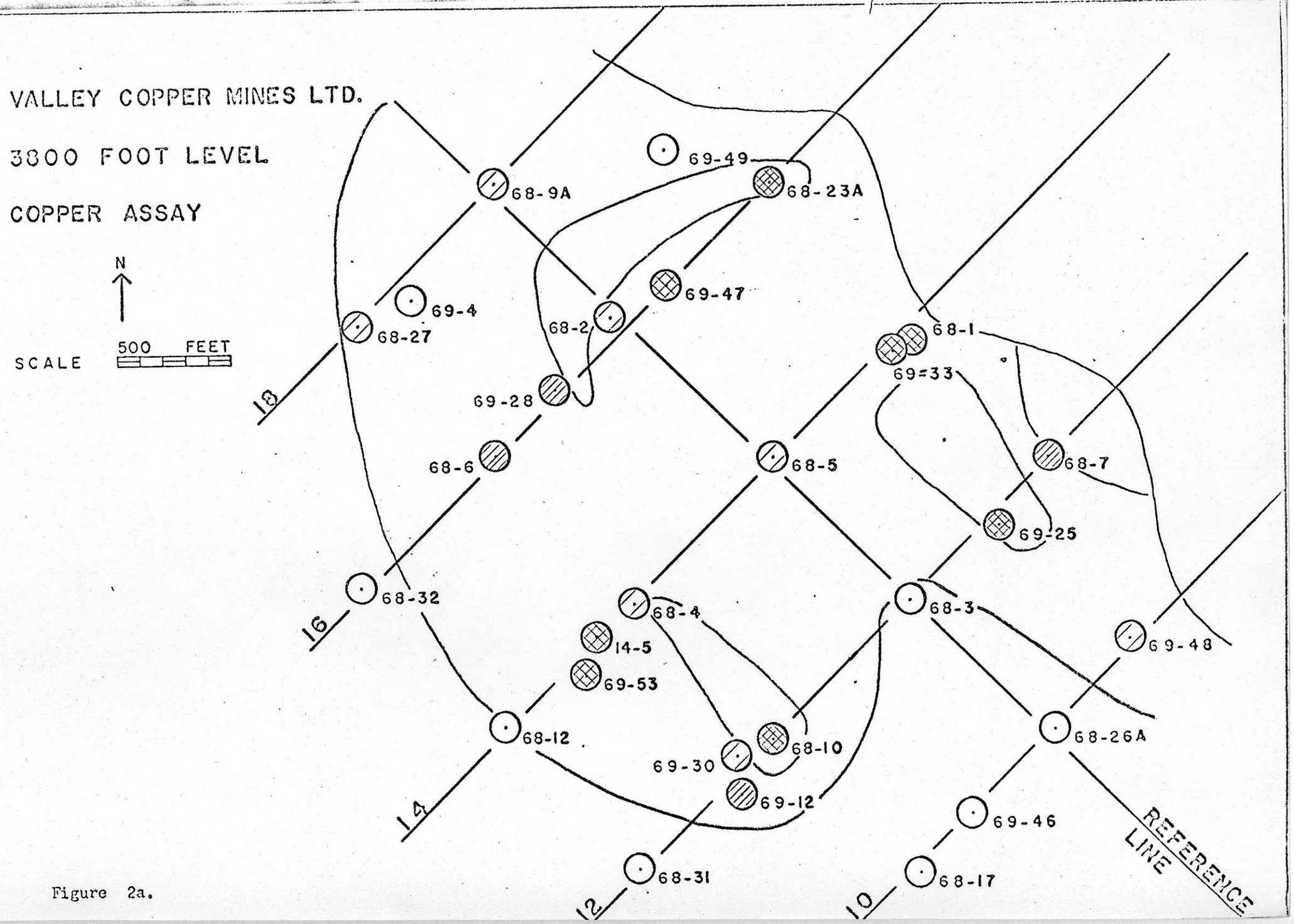
VALLEY COPPER MINES LTD.
3800 FOOT LEVEL
COPPER ASSAY
N
SCALE
500 FEET
69-49
68-9A
68-23A
69-47
69-4
68-27
68-2
68-1
69-33
69-28
18
68-6
68-5
68-7
69-25
68-32
16
68-4
68-3
14-5
69-48
69-53
68-12
68-10
68-26A
69-30
69-12
14
69-46
REFERENCE LINE
68-31
68-17
12
10

Figure 2a.

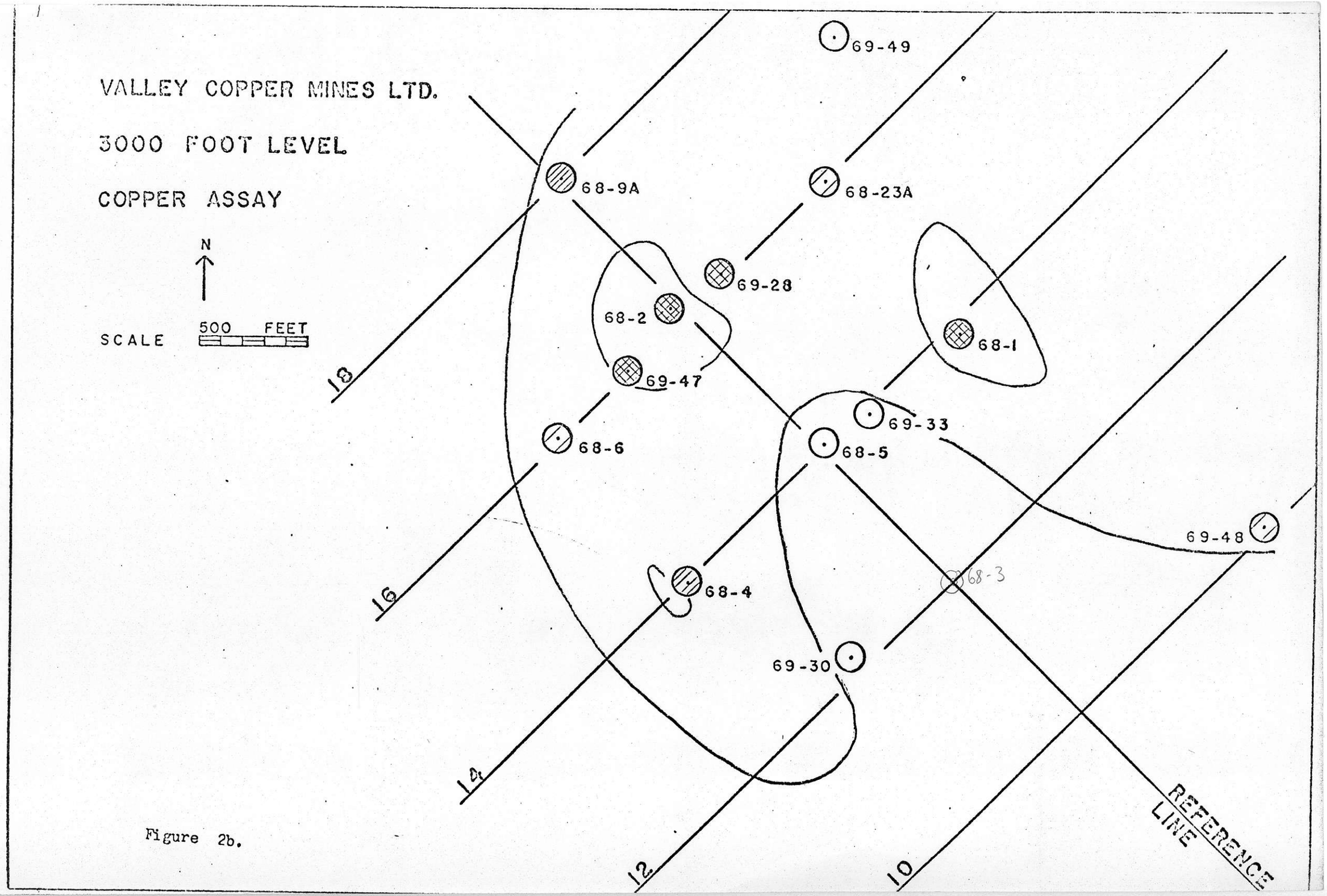
VALLEY COPPER MINES LTD.
3000 FOOT LEVEL
COPPER ASSAY
N
SCALE
500 FEET
69-49
68-9A
68-23A
69-28
68-2
68-1
69-47
69-33
68-6
68-5
69-48
68-3
68-4
69-30
18
16
14
12
10
REFERENCE LINE

Figure 2b.

REFERENCE LINE SECTION COPPER ASSAY

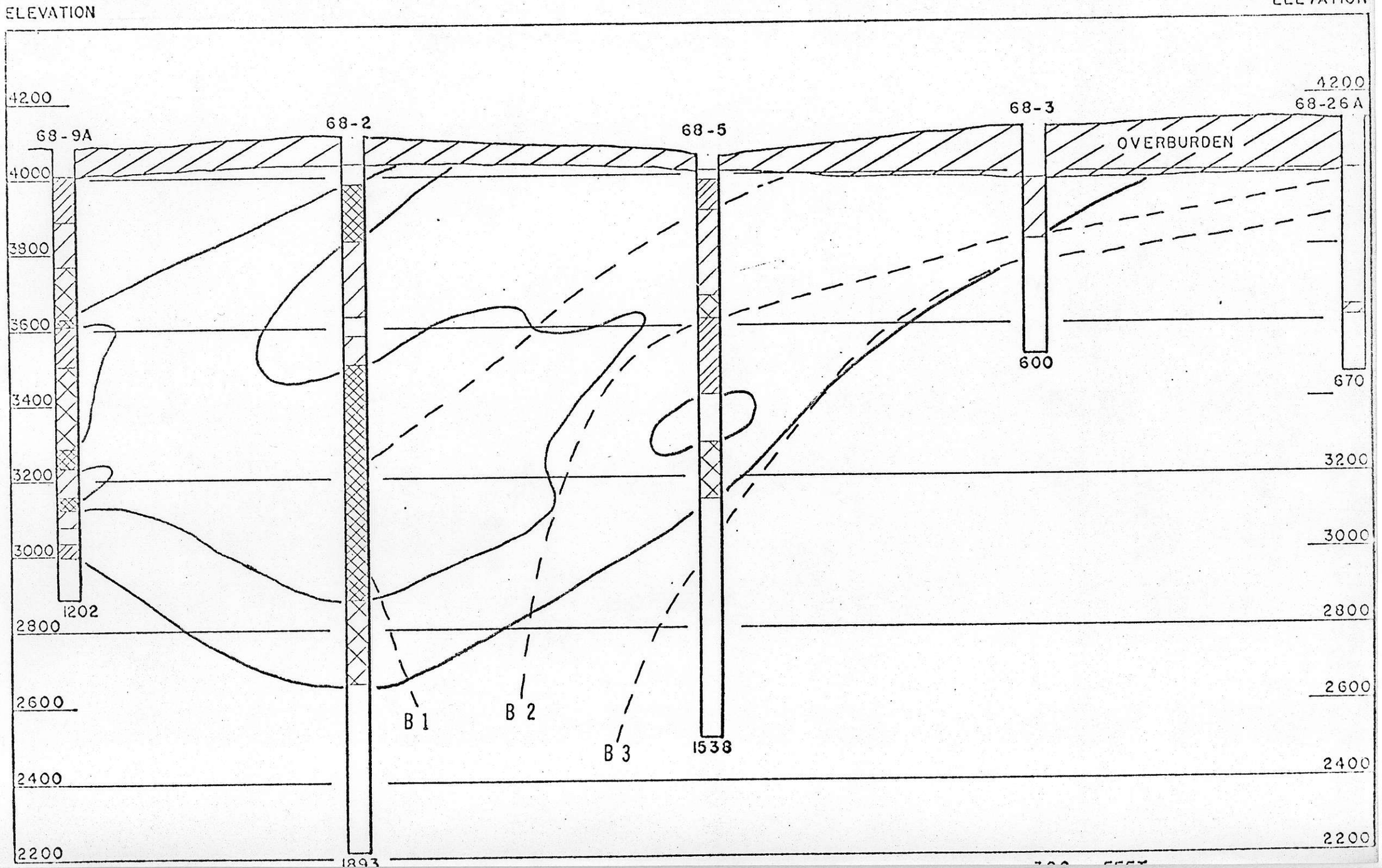

SECTION 12 COPPER ASSAY

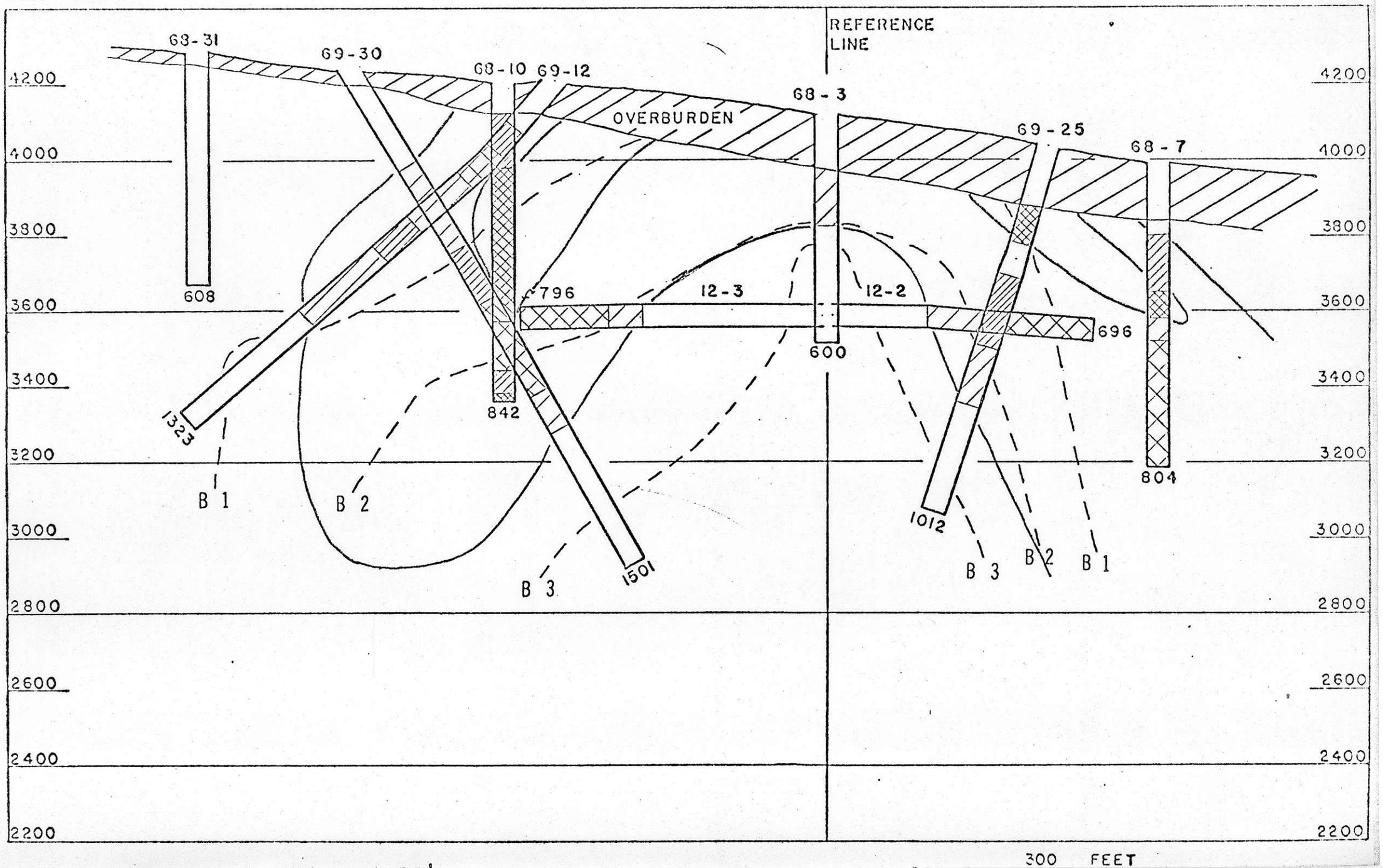

SECTION 16 COPPER ASSAY

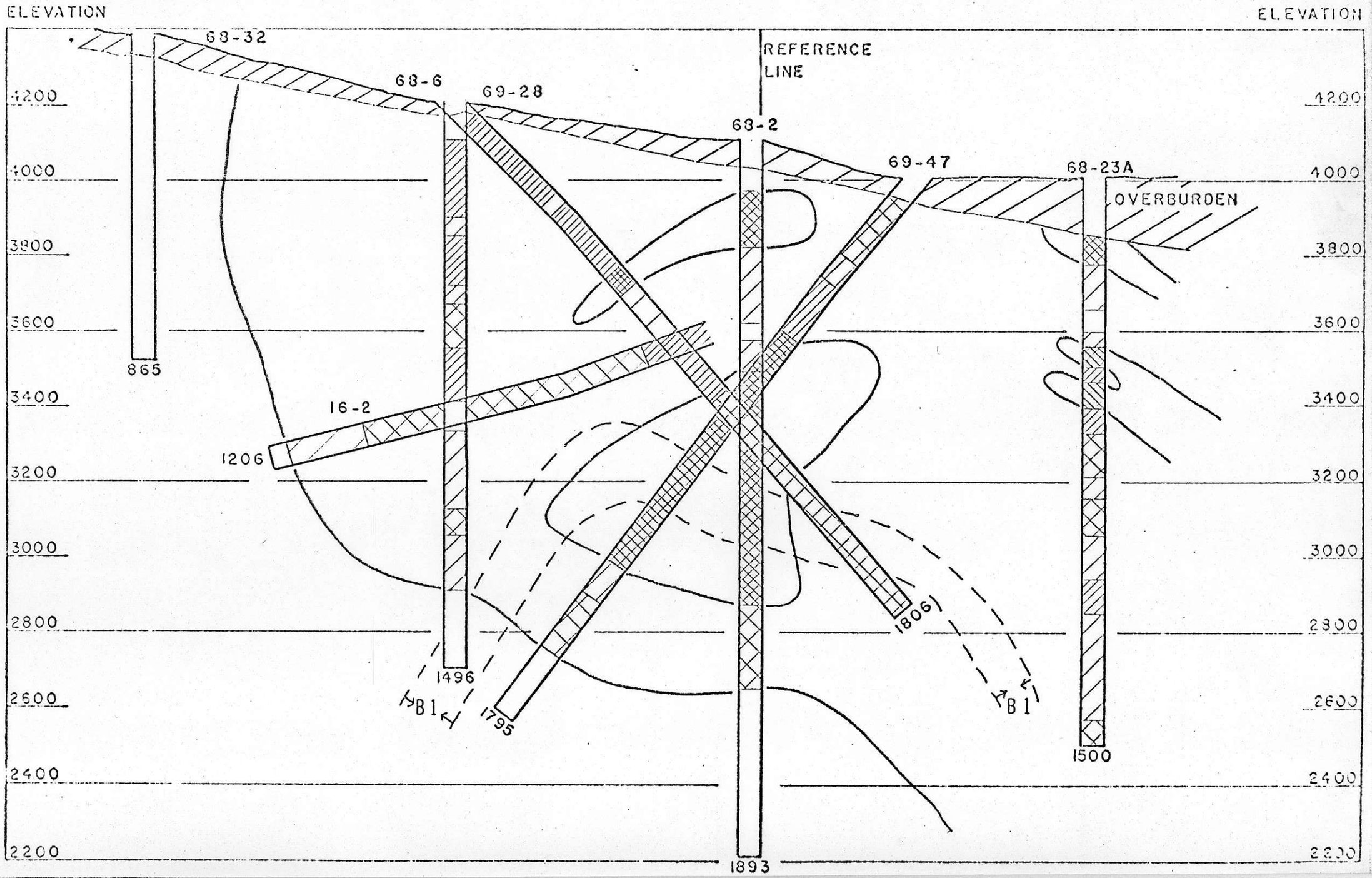

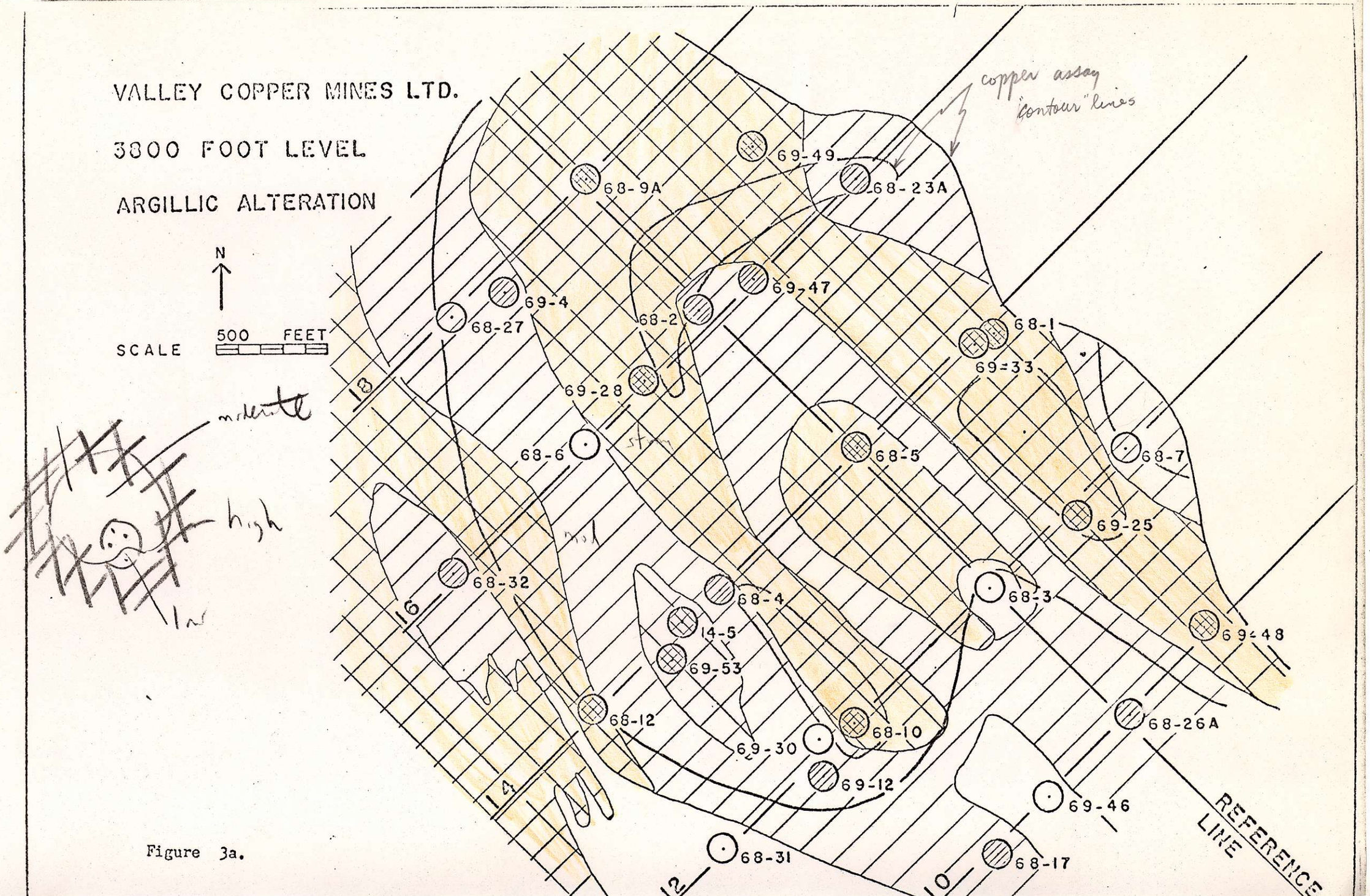
VALLEY COPPER MINES LTD.
3800 FOOT LEVEL
ARGILLIC ALTERATION
N
SCALE
500 FEET
copper assay "contour" lines
moderate
high
low
69-49
68-23A
68-9A
69-47
69-4
68-27
68-2
68-1
69-33
69-28
68-6
68-5
68-7
69-25
68-32
68-4
68-3
14-5
69-53
69-48
68-12
68-10
68-26A
69-30
69-12
69-46
68-31
68-17
REFERENCE LINE
18
16
14
12
10

Figure 3a.

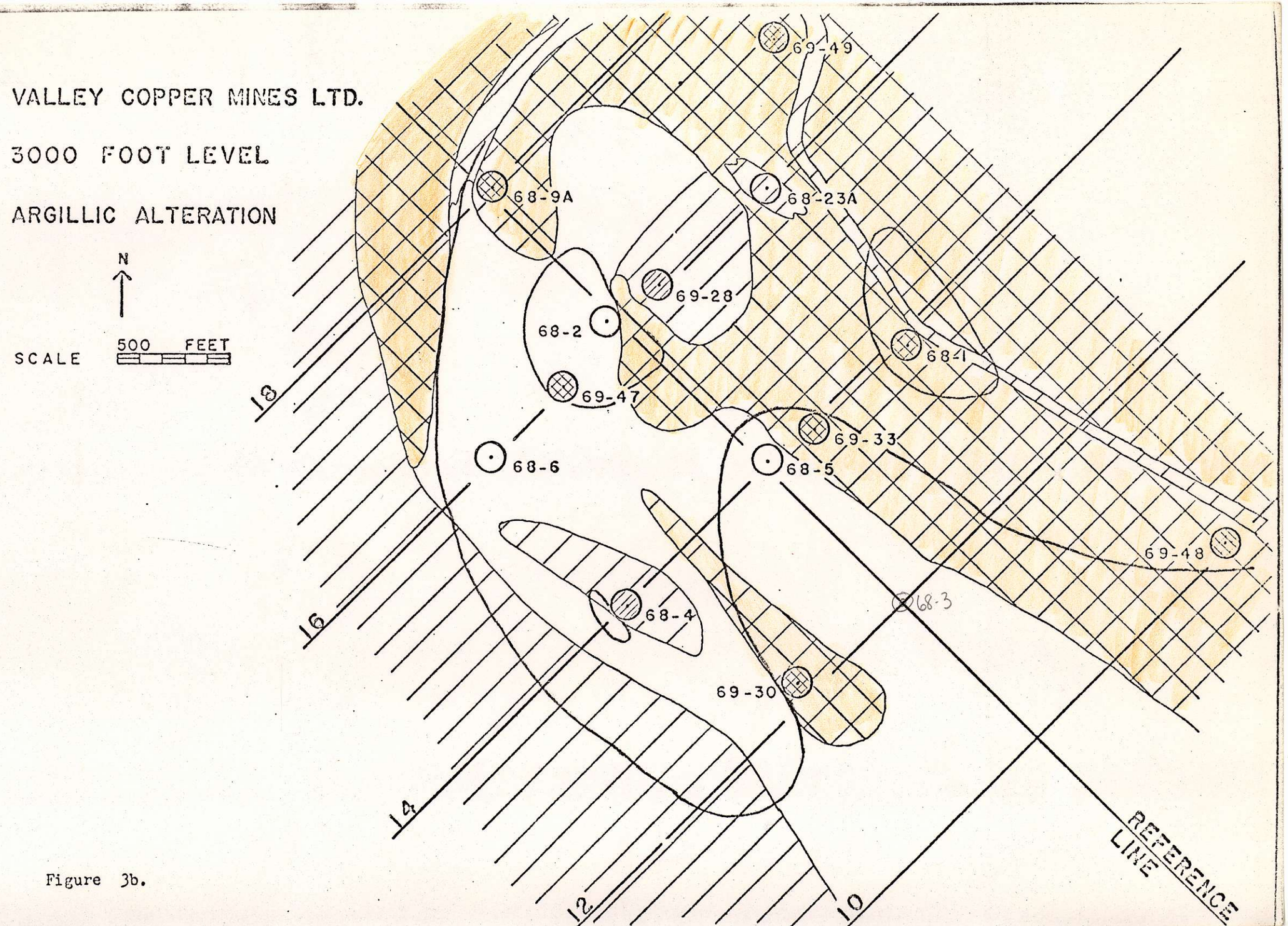
VALLEY COPPER MINES LTD.
3000 FOOT LEVEL
ARGILLIC ALTERATION
N
SCALE
500 FEET
69-49
68-9A
68-23A
69-28
68-2
68-1
69-47
69-33
68-6
68-5
69-48
68-3
68-4
69-30
18
16
14
12
10
REFERENCE LINE

Figure 3b.

REFERENCE LINE SECTION ARGILLIC ALTERATION

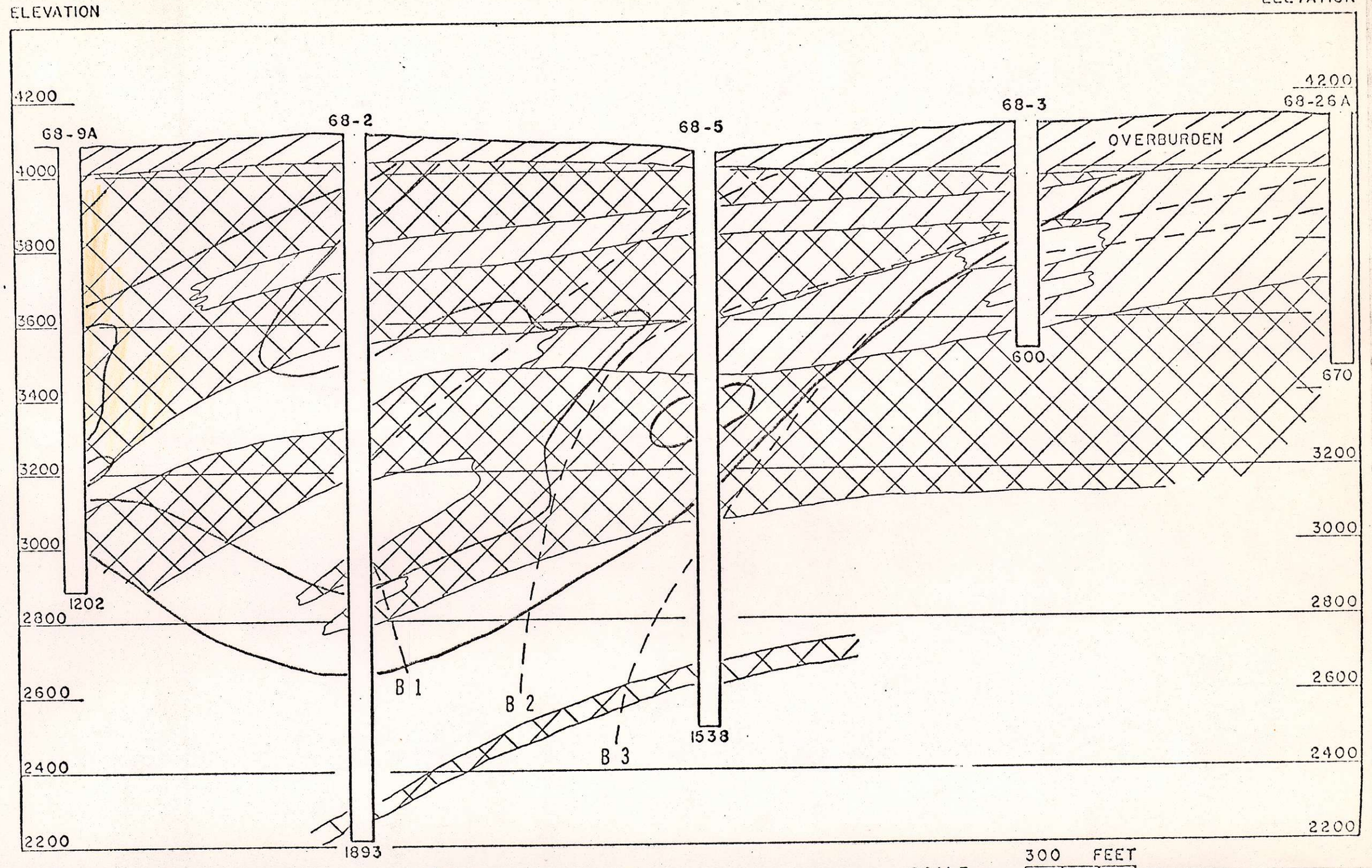

SECTION 12 ARGILLIC ALTERATION

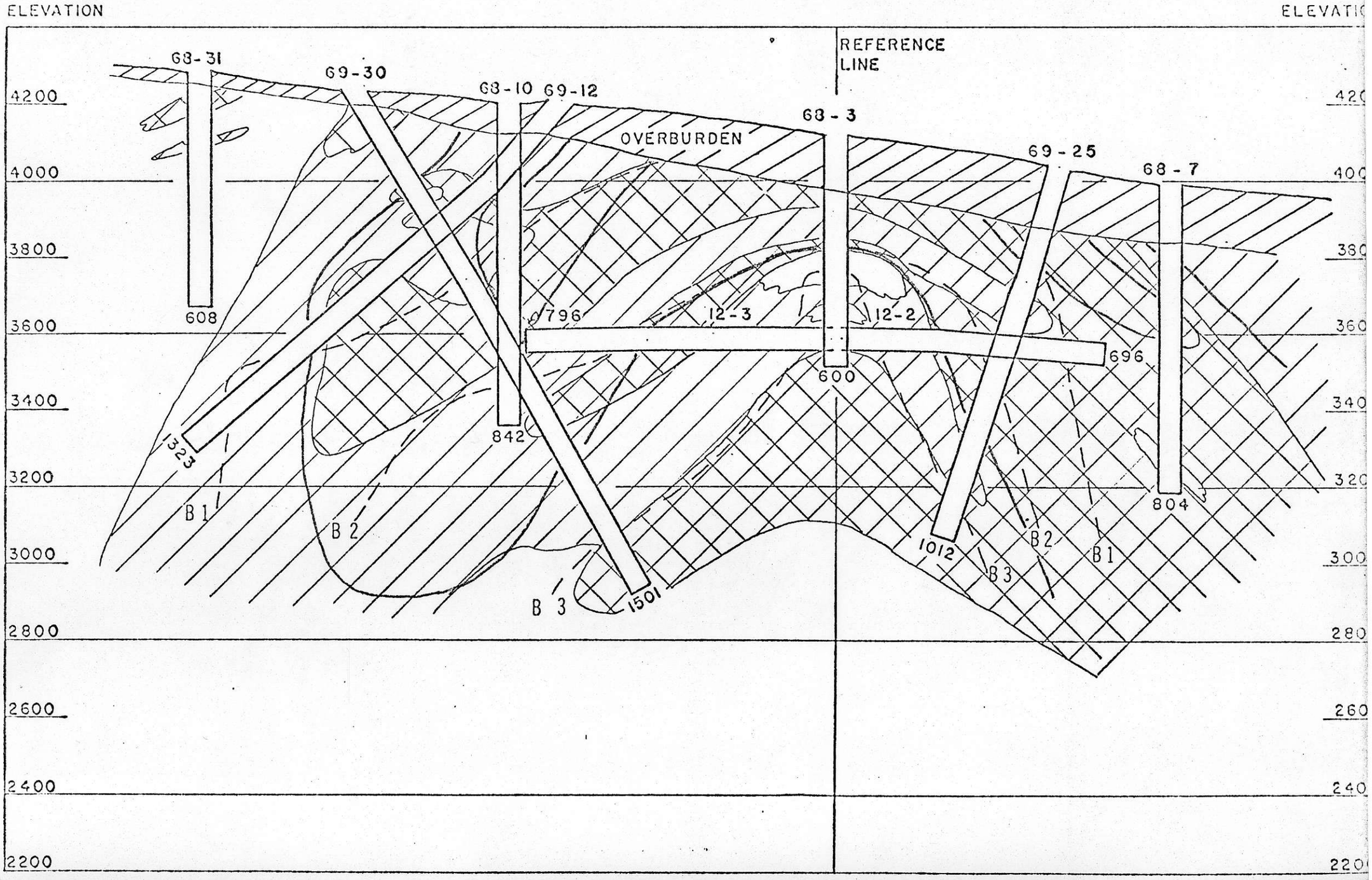

AZIMUTH 140-55'

Figure 3a

SECTION 16 ARGILLIC ALTERATION

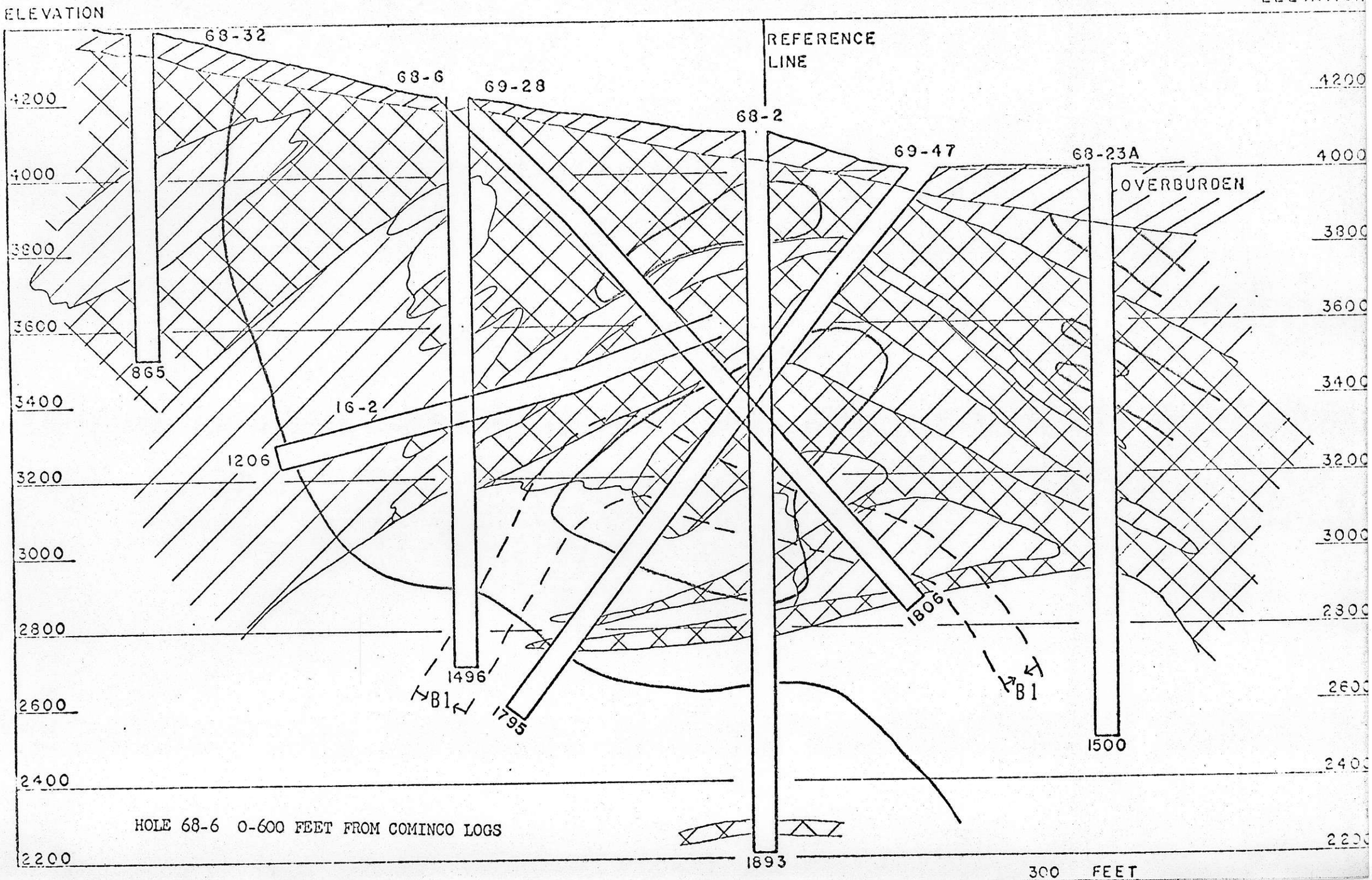

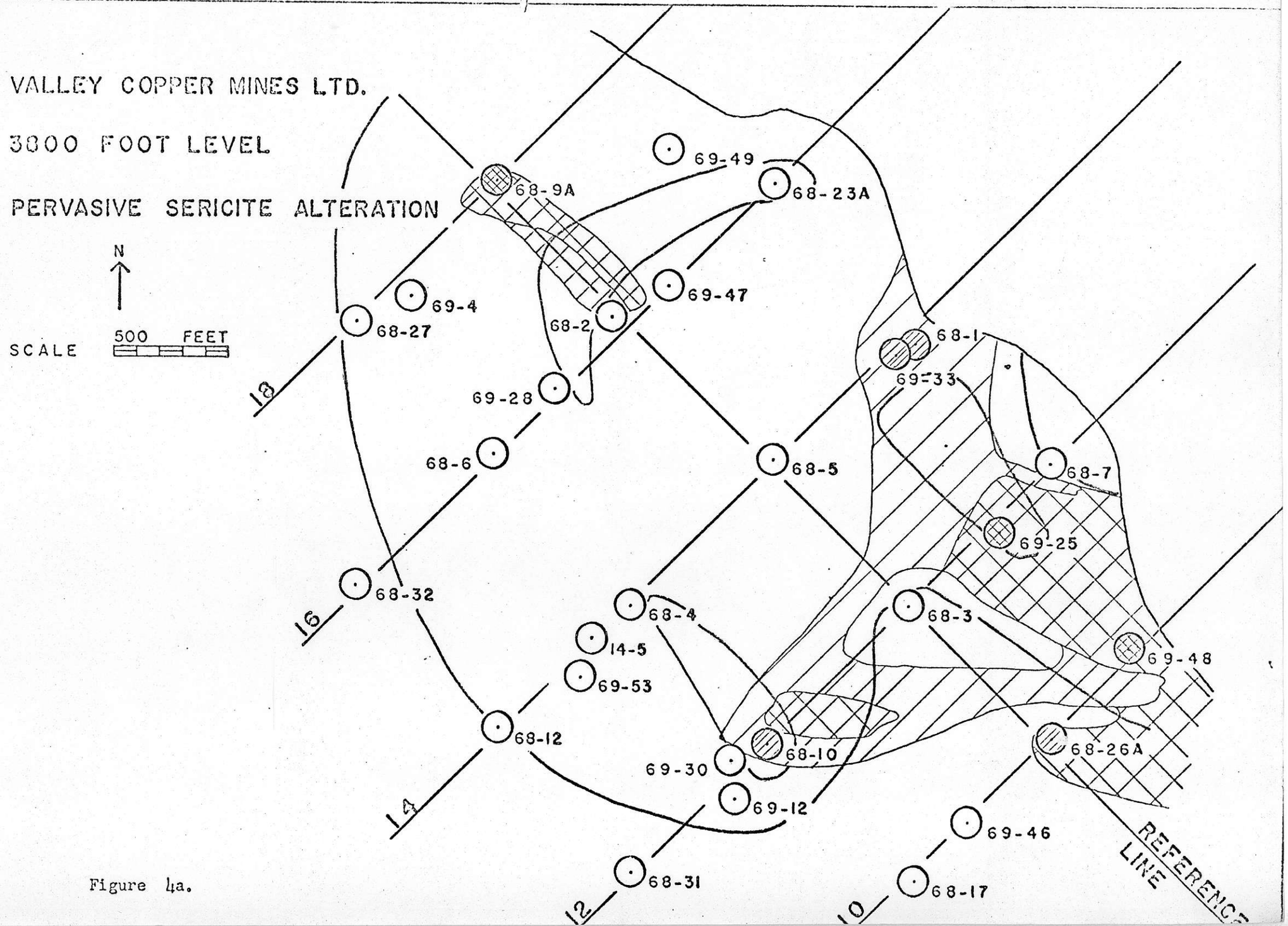
VALLEY COPPER MINES LTD.
3800 FOOT LEVEL
PERVASIVE SERICITE ALTERATION
N
SCALE
500 FEET
69-49
68-9A
68-23A
69-47
69-4
68-27
68-2
68-1
69-33
69-28
68-6
68-5
68-7
69-25
68-32
68-4
68-3
14-5
69-53
69-48
68-12
68-10
68-26A
69-30
69-12
69-46
68-31
68-17
REFERENCE LINE
18
16
14
12
10

Figure 4a.

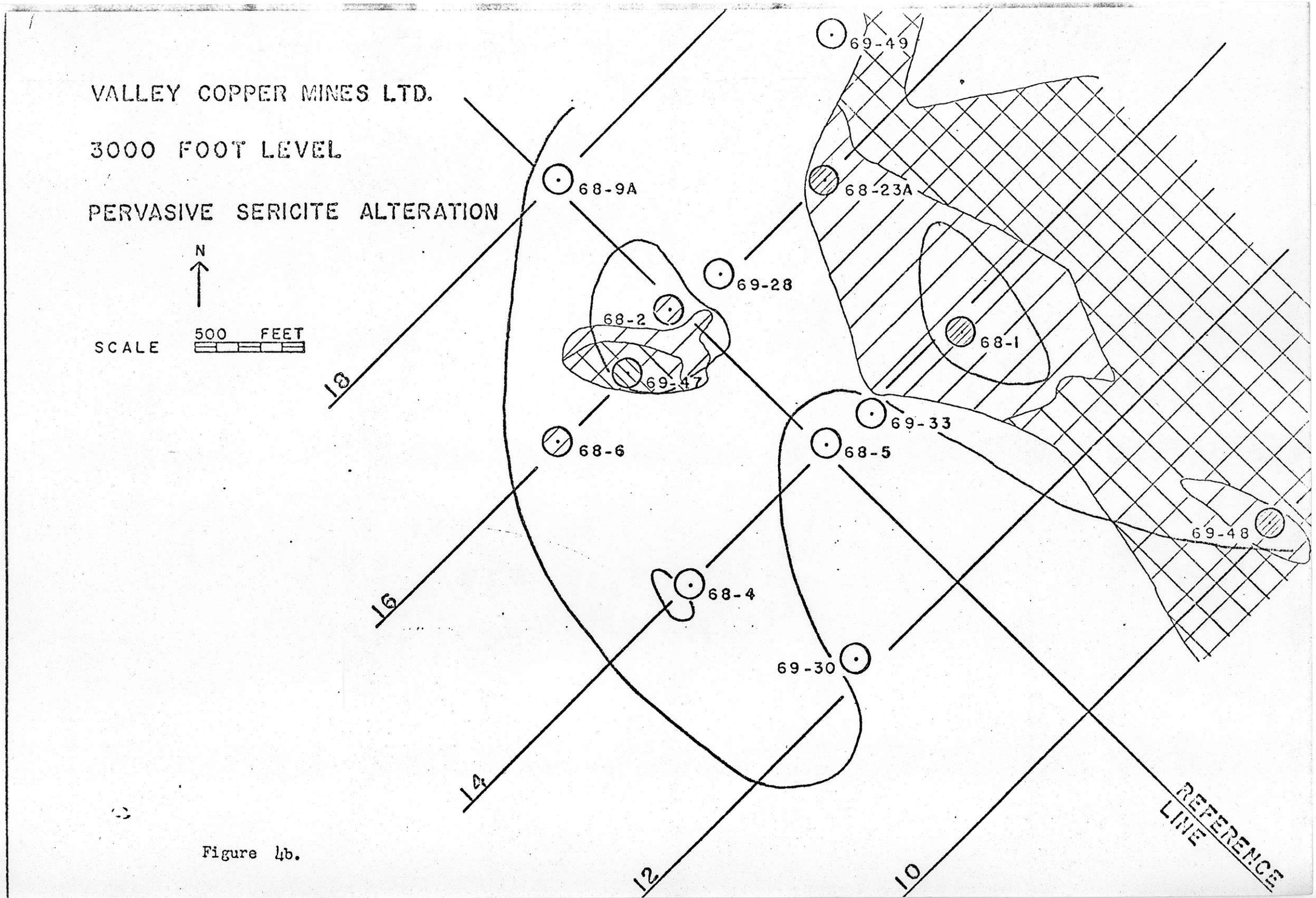
VALLEY COPPER MINES LTD.
3000 FOOT LEVEL
PERVASIVE SERICITE ALTERATION
N
SCALE
500 FEET
69-49
68-9A
68-23A
69-28
68-2
68-1
69-47
69-33
68-6
68-5
69-48
68-4
69-30
18
16
14
12
10
REFERENCE LINE

Figure 4b.

REFERENCE LINE SECTION PERVASIVE SERICITE ALTERATION

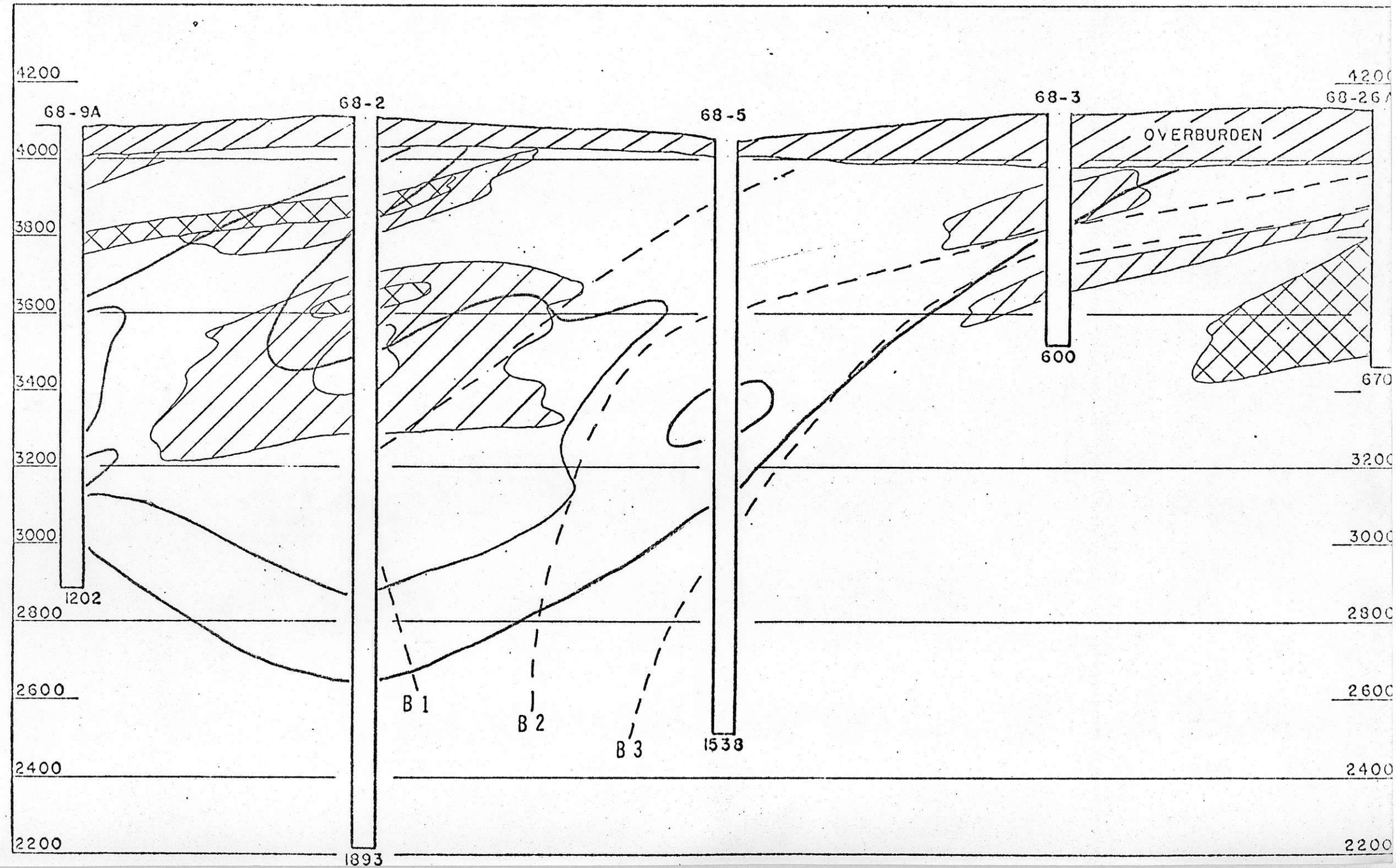

SECTION 12 PERVASIVE SERICITE ALTERATION

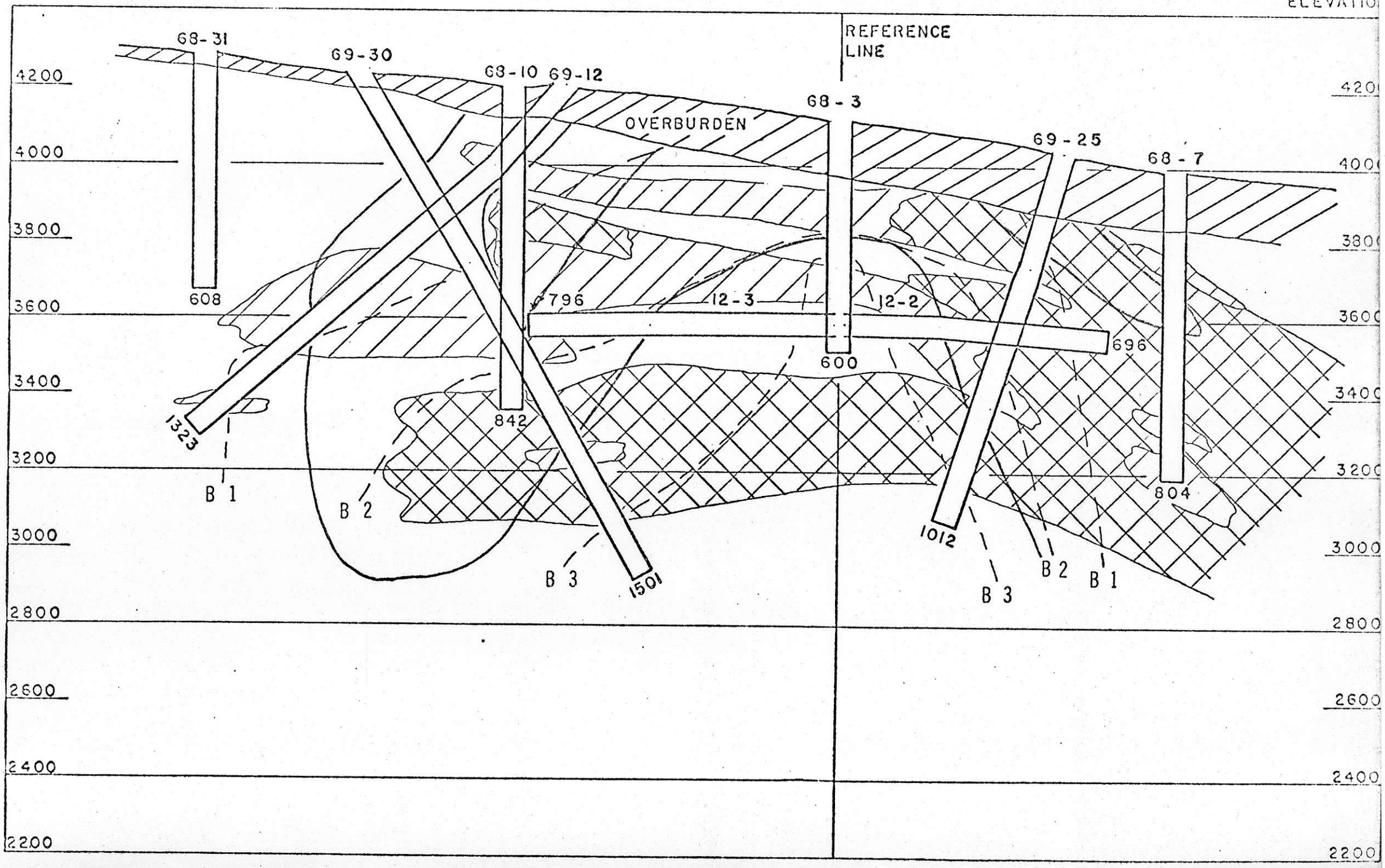

300 FEET

SECTION 16 PERVASIVE SERICITE ALTERATION

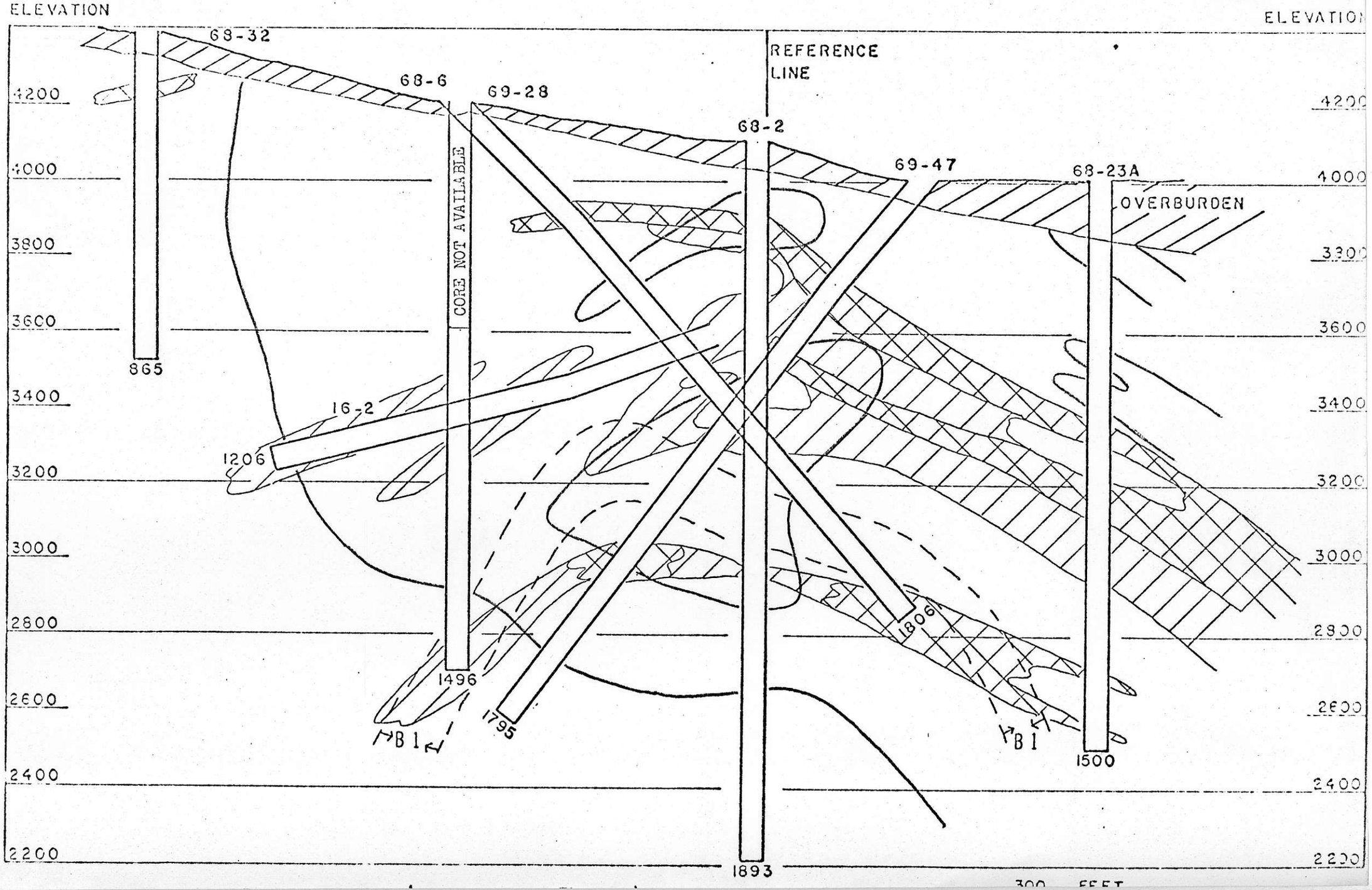

SECTION 16 SULFIDE DISTRIBUTION

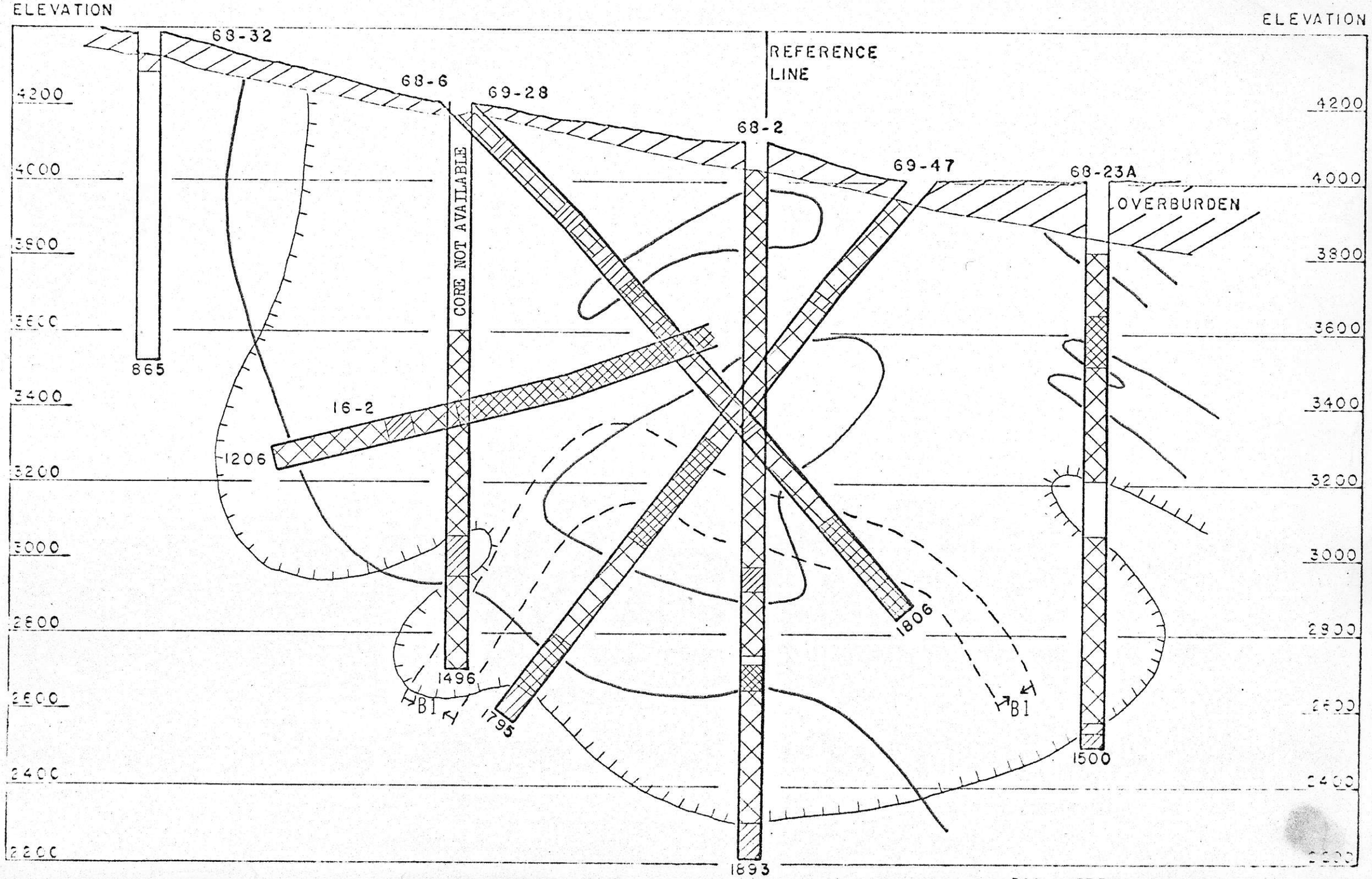

AZIMUTH 44° 55'

Figure 7g.

SCALE 300 FEET

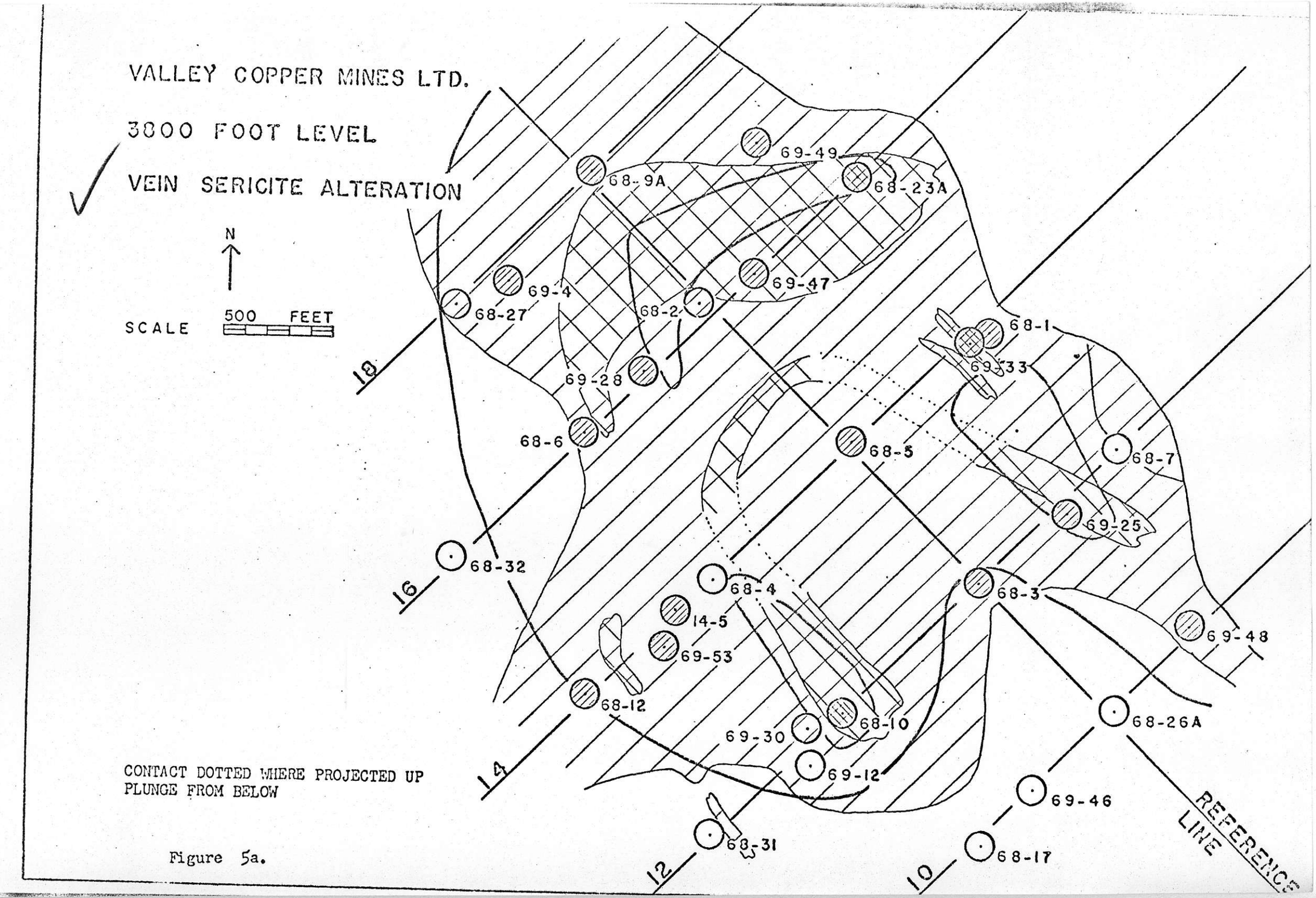
VALLEY COPPER MINES LTD.
3800 FOOT LEVEL
VEIN SERICITE ALTERATION
N
SCALE
500 FEET
69-49
68-9A
68-23A
69-4
68-27
68-2
69-47
69-28
68-1
69-33
68-6
68-5
68-7
69-25
68-32
68-4
68-3
14-5
69-53
69-48
68-12
68-10
68-26A
69-30
69-12
69-46
68-31
68-17
18
16
14
12
10
REFERENCE LINE
CONTACT DOTTED WHERE PROJECTED UP
PLUNGE FROM BELOW

Figure 5a.

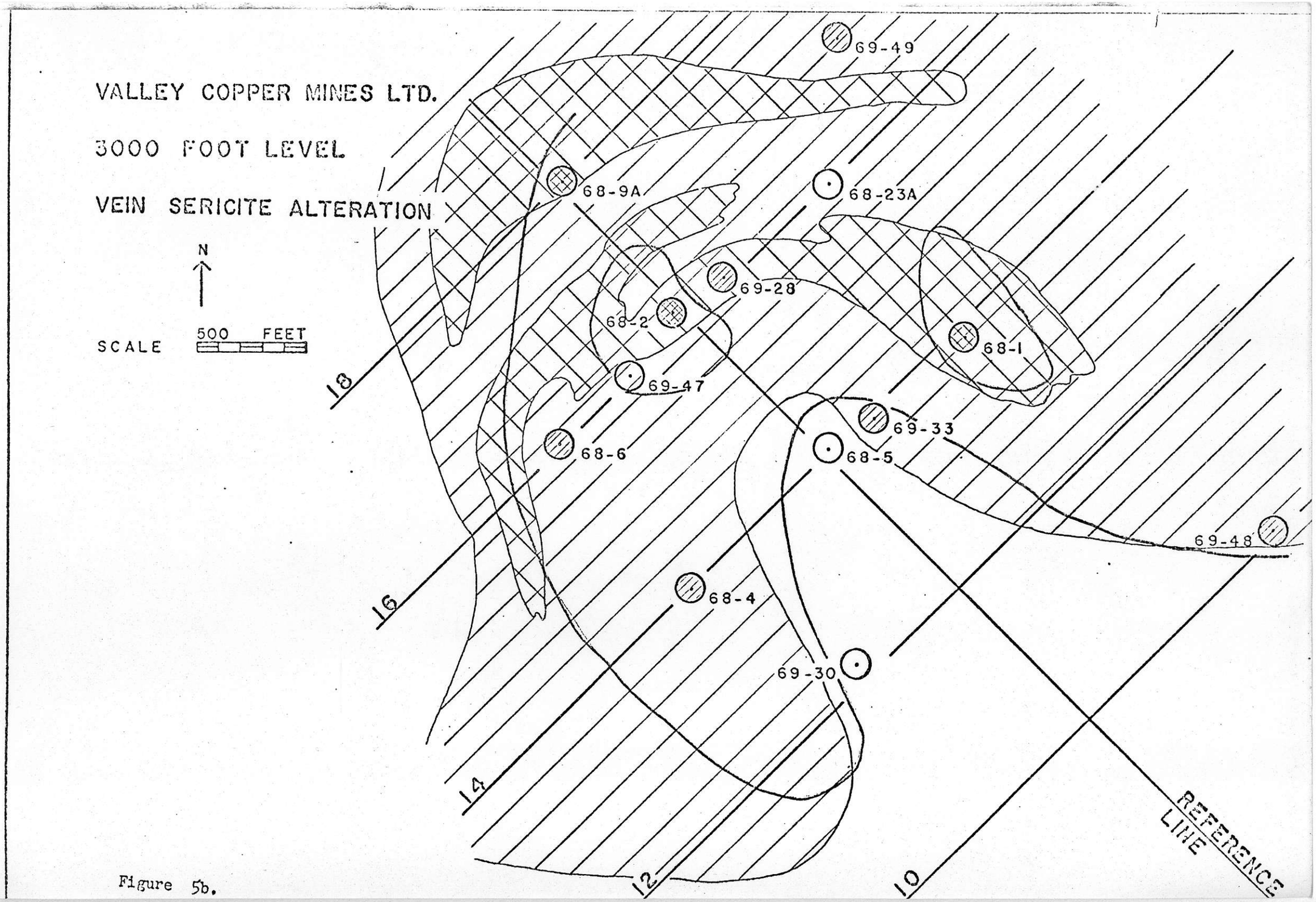
VALLEY COPPER MINES LTD.
3000 FOOT LEVEL
VEIN SERICITE ALTERATION
N
SCALE
500 FEET
69-49
68-9A
68-23A
69-28
68-2
68-1
69-47
69-33
68-6
68-5
69-48
68-4
69-30
18
16
14
12
10
REFERENCE LINE

Figure 5b.

REFERENCE LINE SECTION VEIN SERICITE ALTERATION

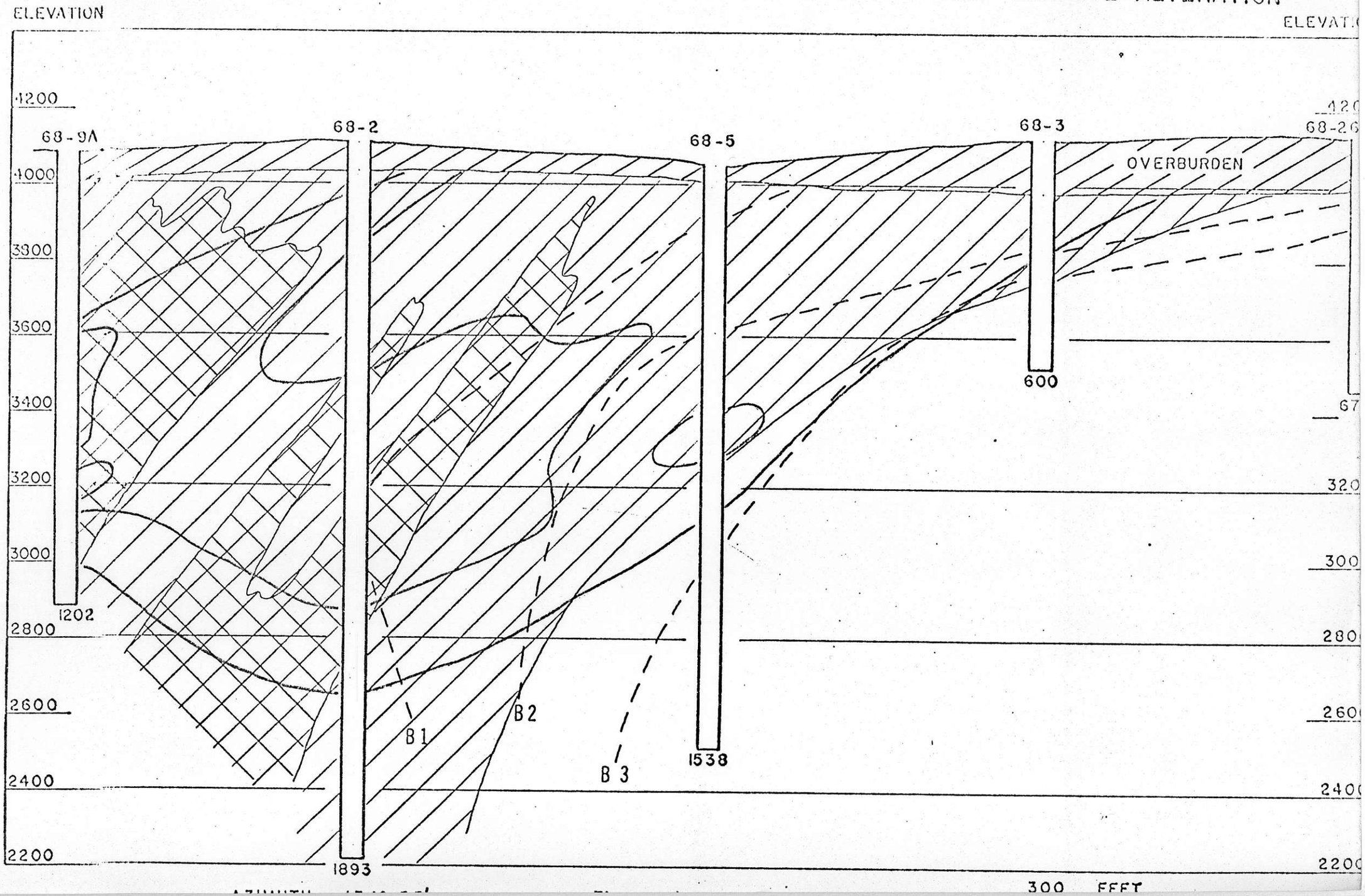

SECTION 12 VEIN SERICITE ALTERATION

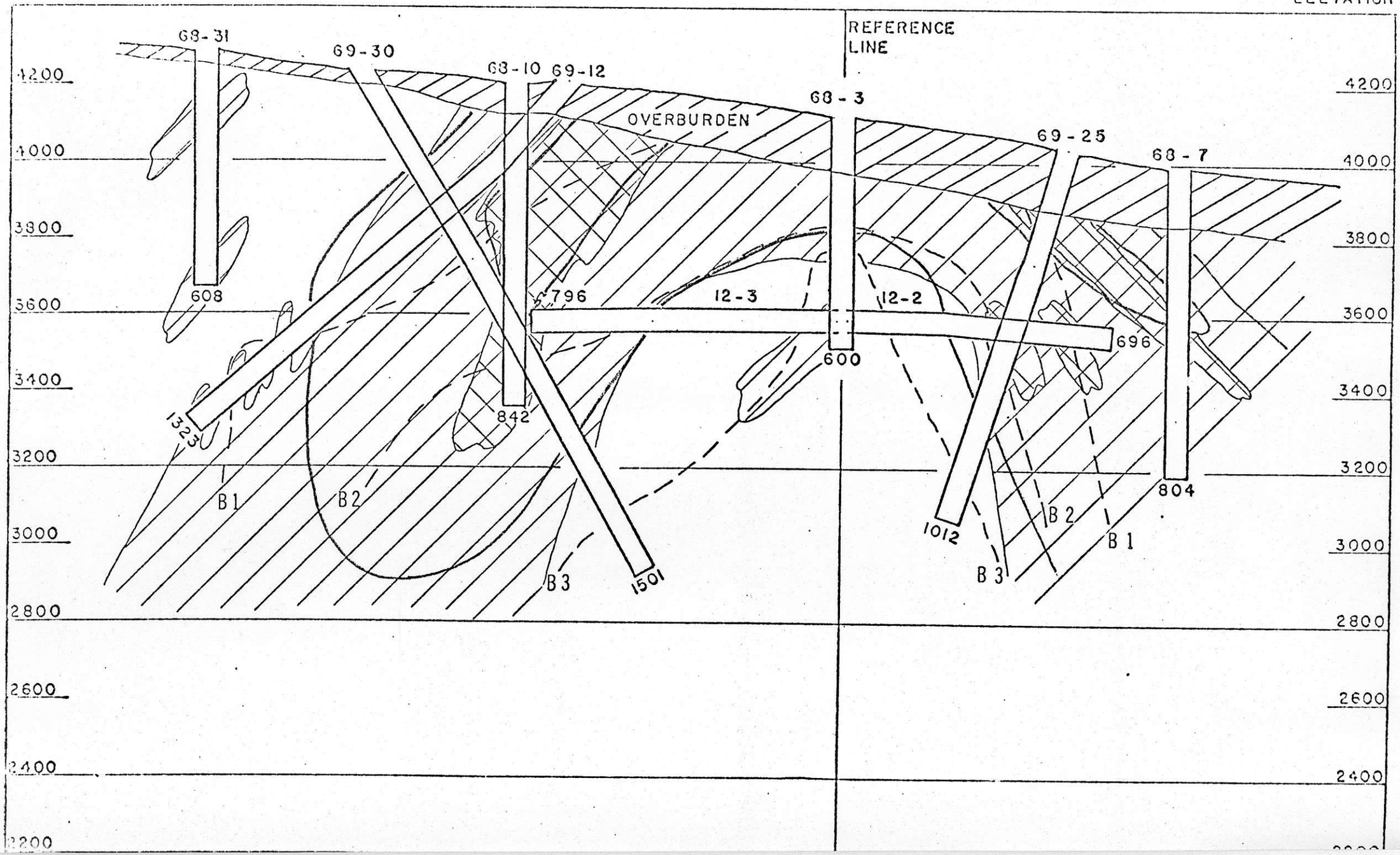

SECTION 16 VEIN SERICITE ALTERATION

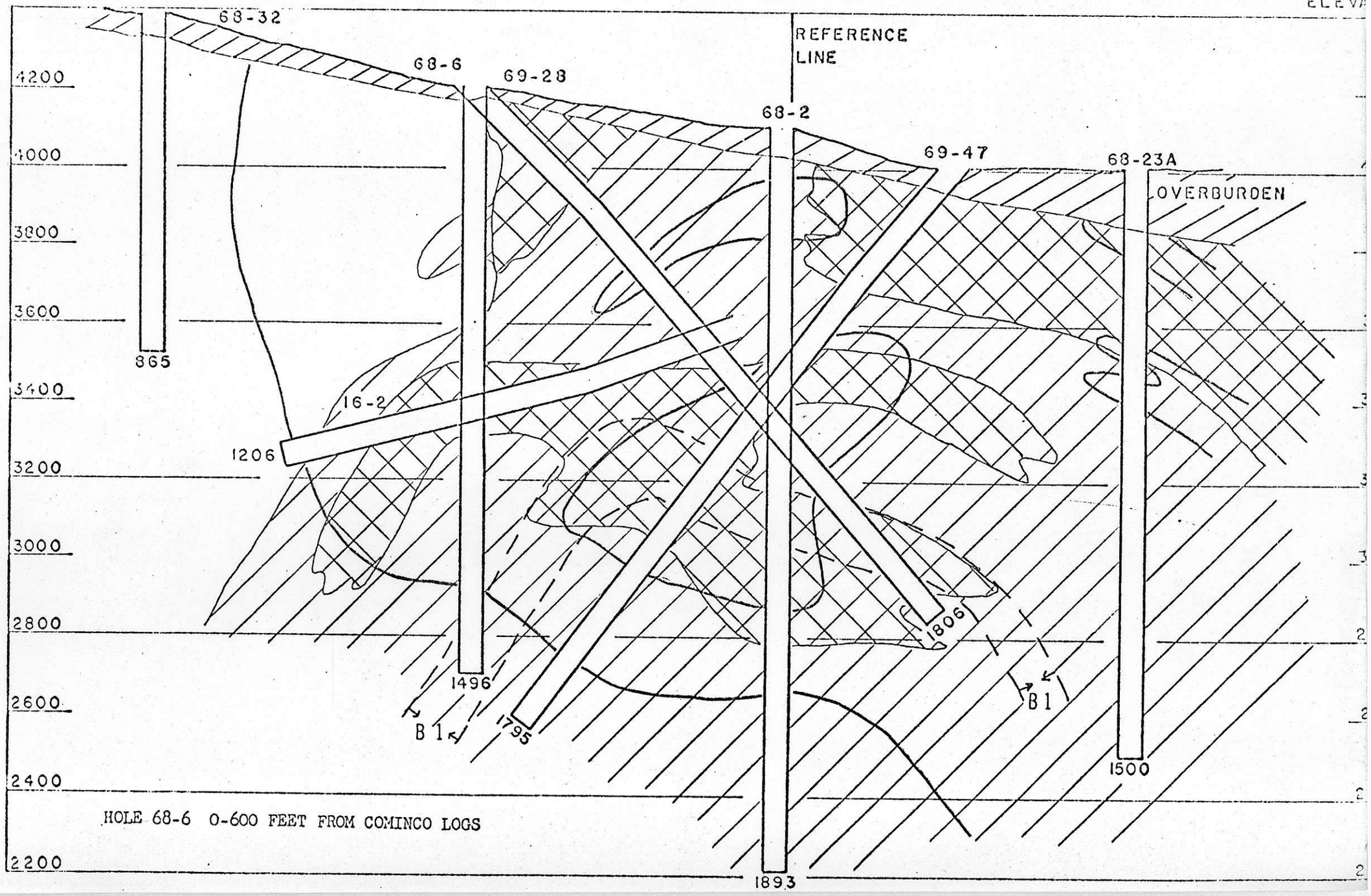

HOLE 68-6 0-600 FEET FROM COMINCO LOGS

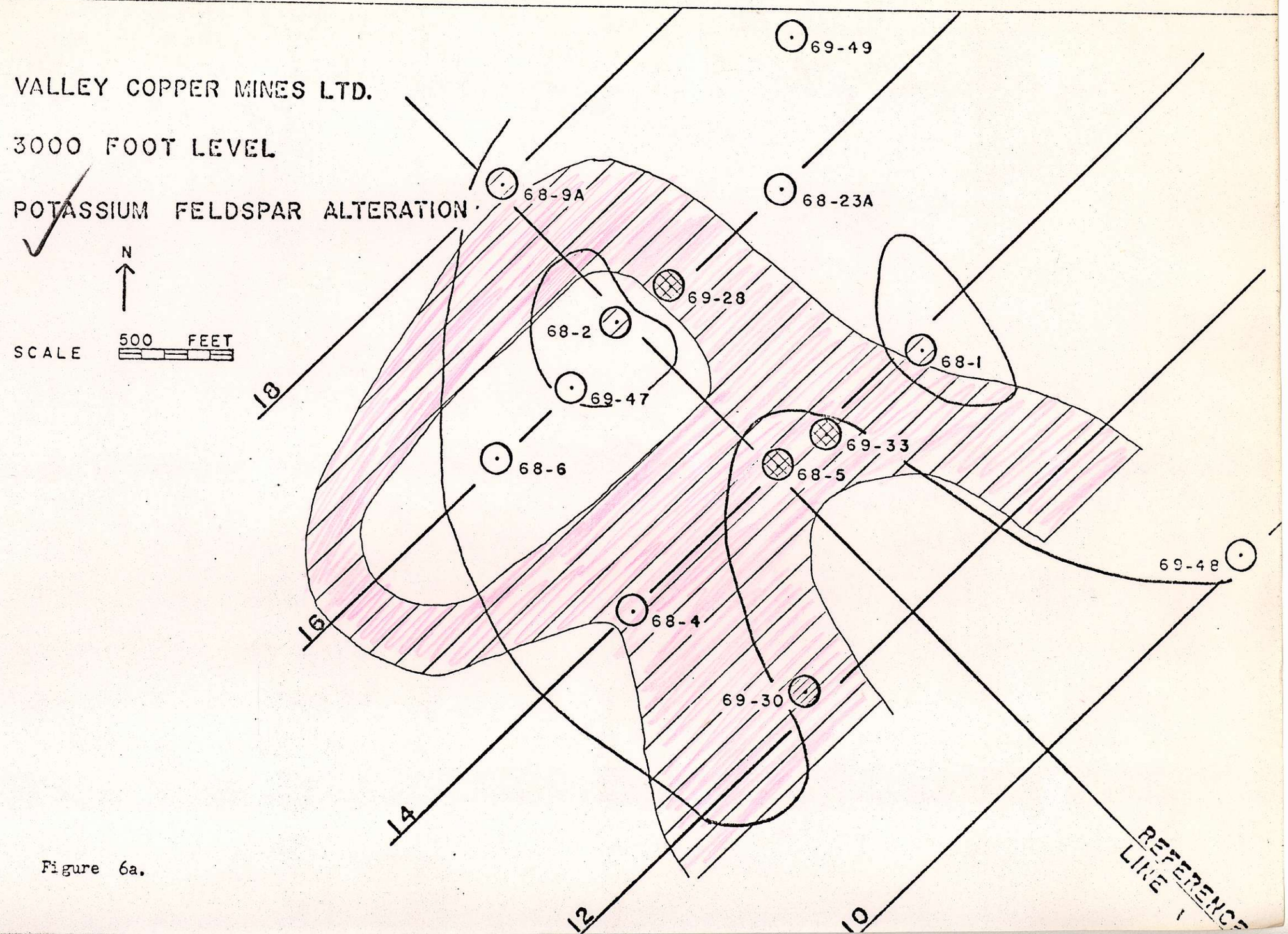
VALLEY COPPER MINES LTD.
3000 FOOT LEVEL
POTASSIUM FELDSPAR ALTERATION
N
SCALE
500 FEET
69-49
68-9A
68-23A
69-28
68-2
68-1
69-47
69-33
68-6
68-5
69-48
68-4
69-30
18
16
14
12
10
REFERENCE LINE

Figure 6a.

REFERENCE LINE SECTION POTASSIUM FELDSPAR ALTERATION

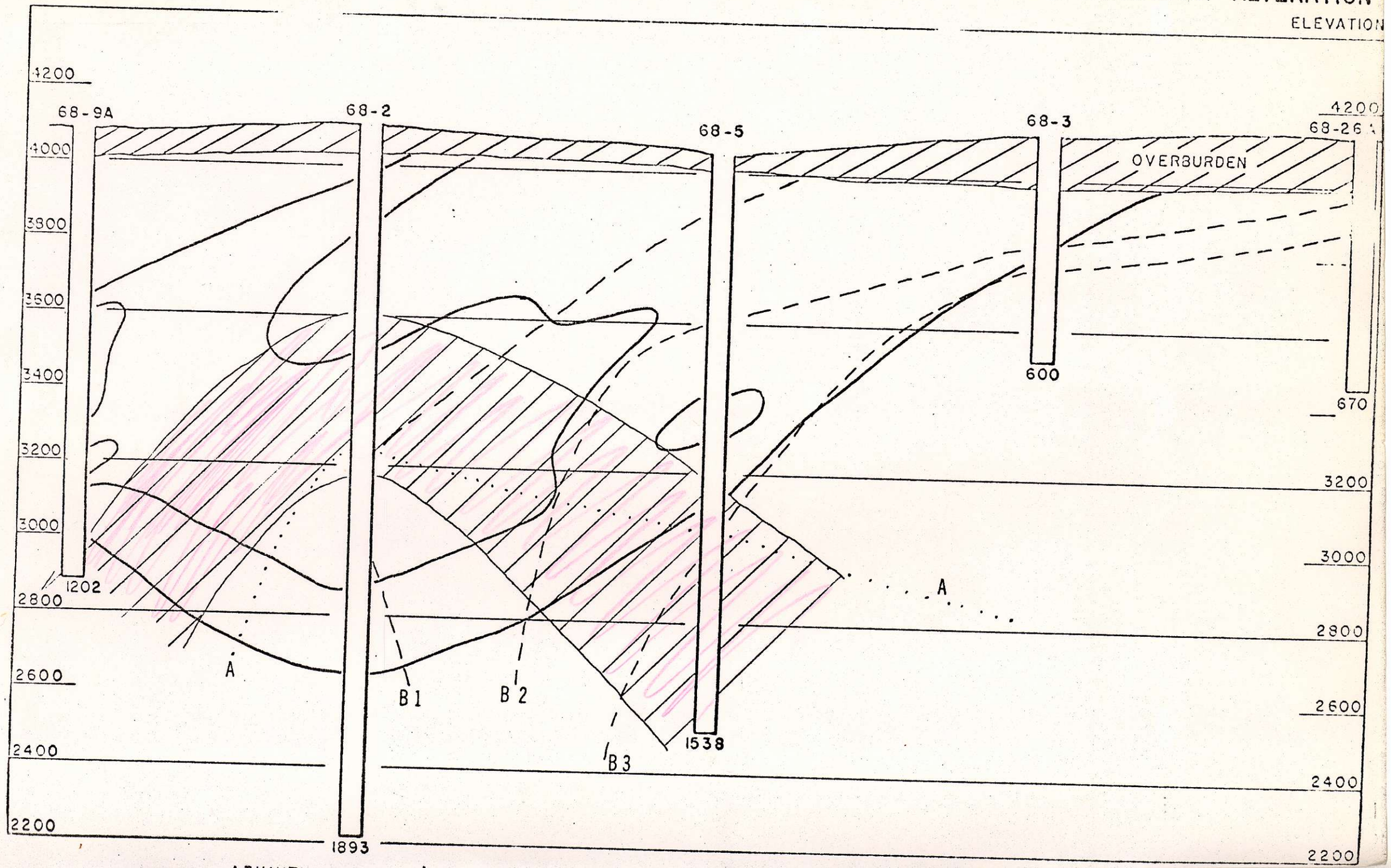

SECTION 12 POTASSIUM FELDSPAR ALTERATION

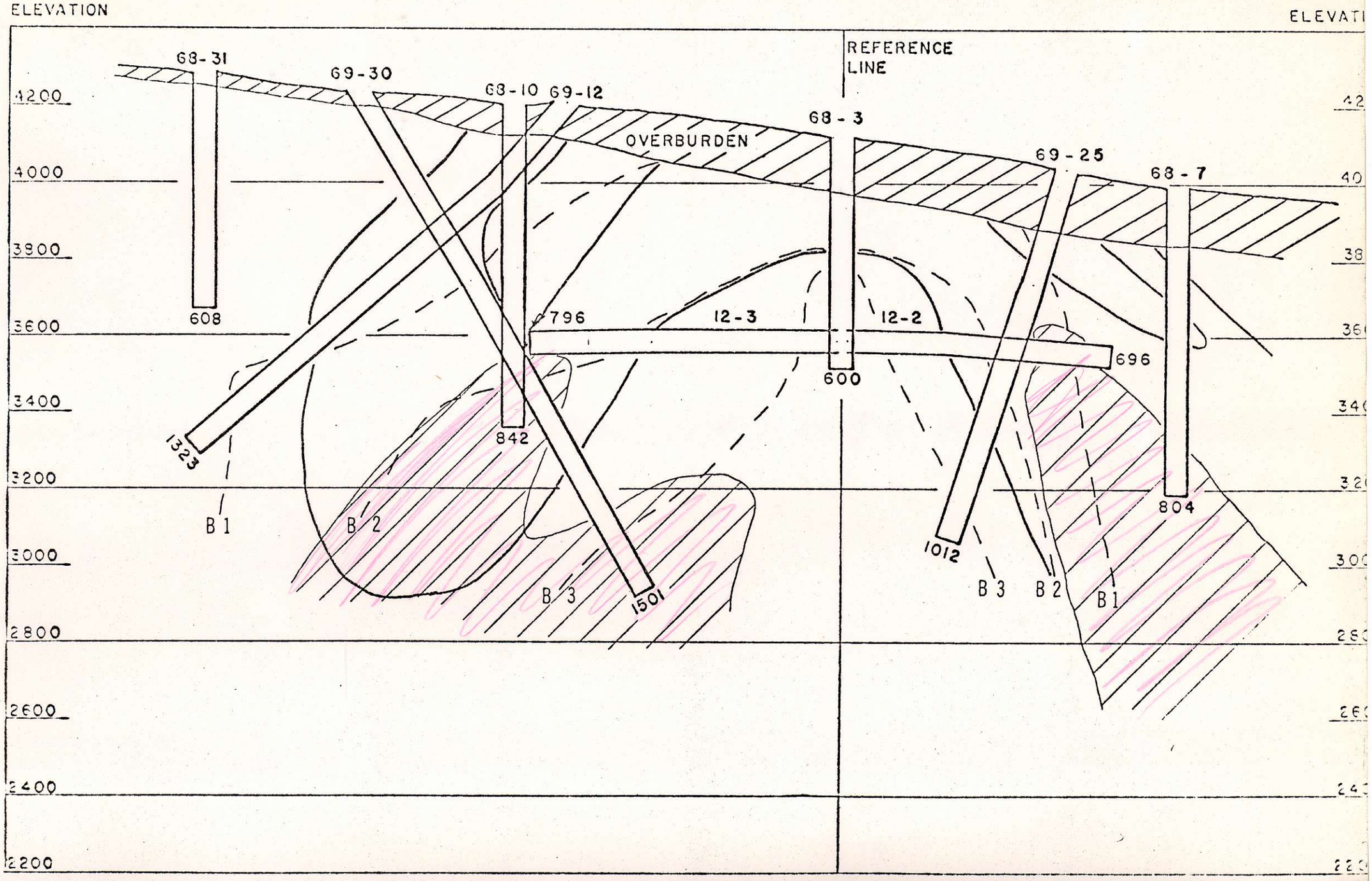

SECTION 16 POTASSIUM FELDSPAR ALTERATION

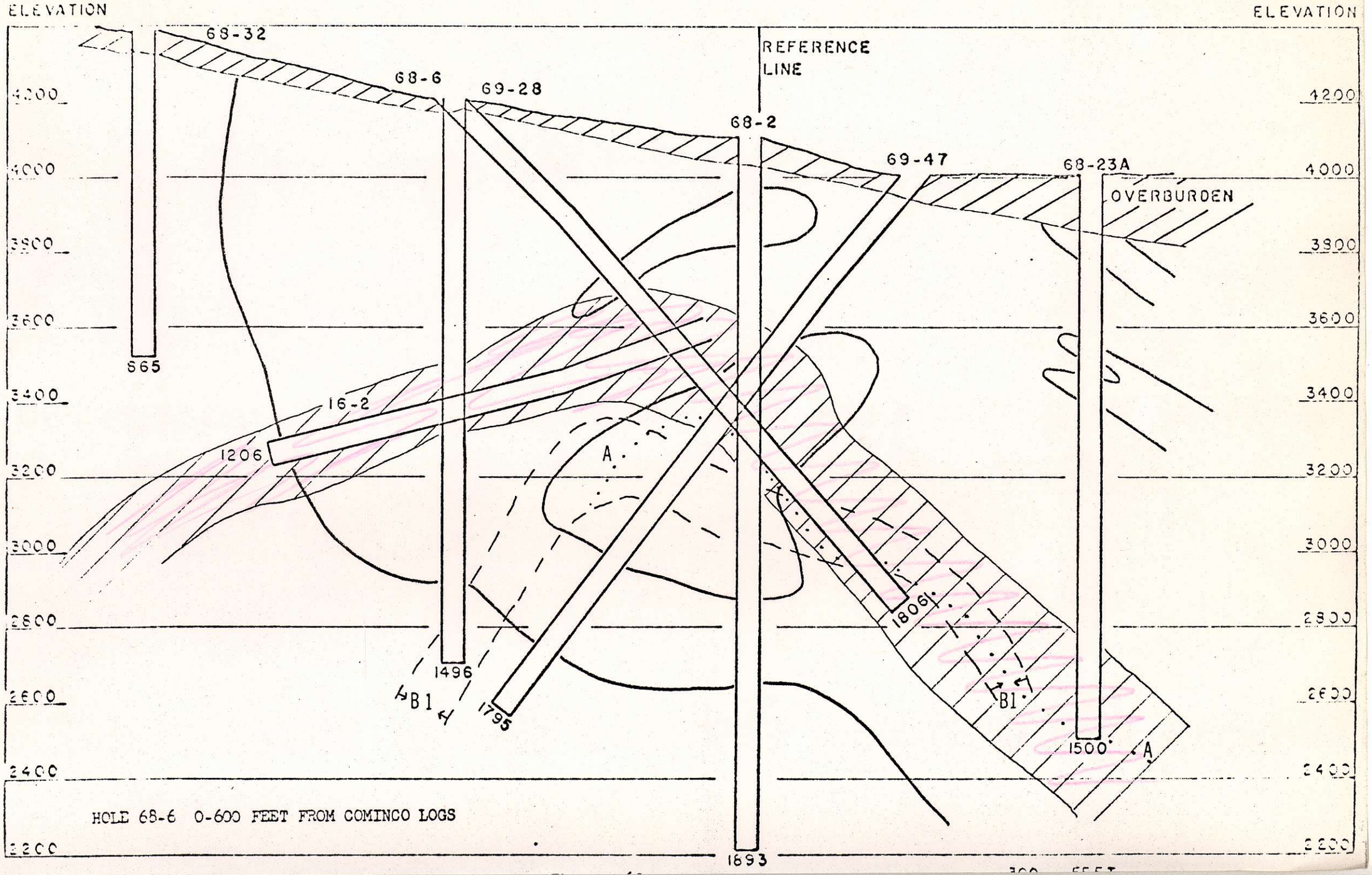

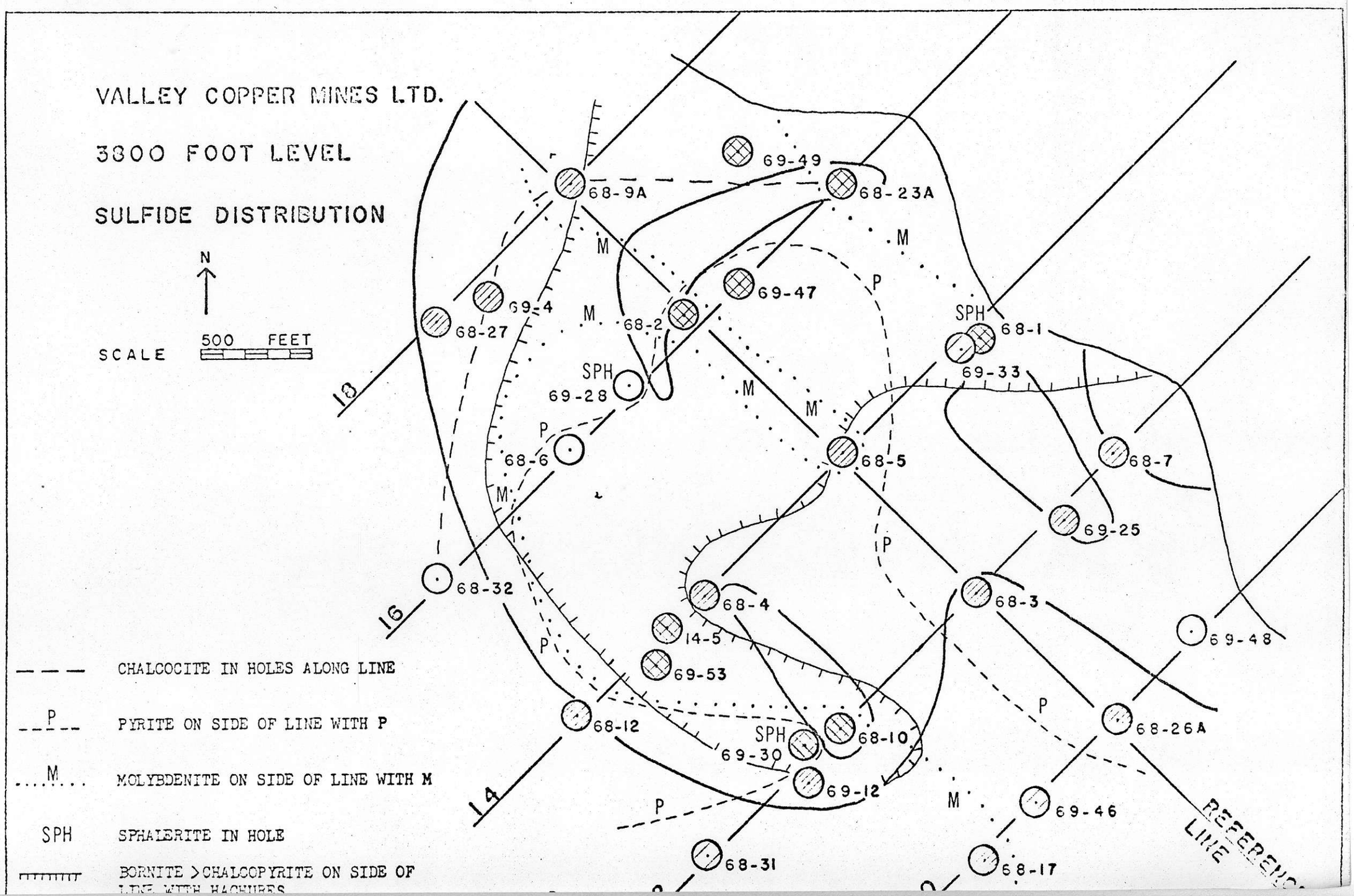
VALLEY COPPER MINES LTD.
3800 FOOT LEVEL
SULFIDE DISTRIBUTION
N
SCALE
500 FEET
69-49
68-9A
68-23A
69-47
69-4
68-27
68-2
SPH
68-1
69-33
SPH
69-28
68-6
68-5
68-7
69-25
68-32
68-4
68-3
14-5
69-48
69-53
68-12
SPH
68-10
68-26A
69-30
69-12
69-46
68-31
68-17
REFERENCE LINE
18
16
14
M
P
CHALCOCITE IN HOLES ALONG LINE
PYRITE ON SIDE OF LINE WITH P
MOLYBDENITE ON SIDE OF LINE WITH M
SPH
SPHALERITE IN HOLE
BORNITE > CHALCOPYRITE ON SIDE OF LINE WITH HACHURES

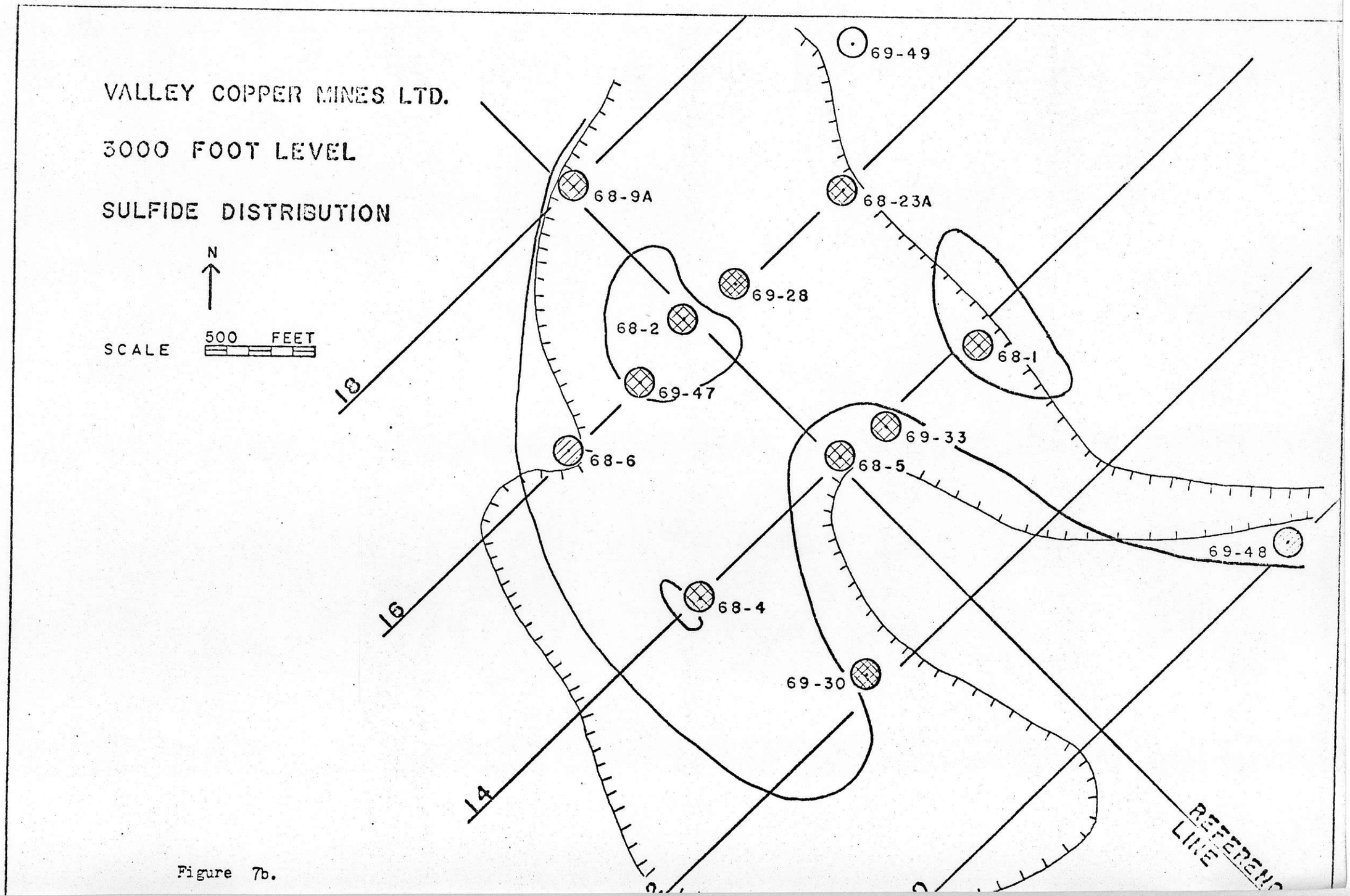
VALLEY COPPER MINES LTD.
3000 FOOT LEVEL
SULFIDE DISTRIBUTION
N
SCALE
500 FEET
69-49
68-9A
68-23A
69-28
68-2
68-1
69-47
69-33
68-6
68-5
69-48
68-4
69-30
18
16
14
REFERENCE LINE

Figure 7b.

REFERENCE LINE SECTION SULFIDE DISTRIBUTION

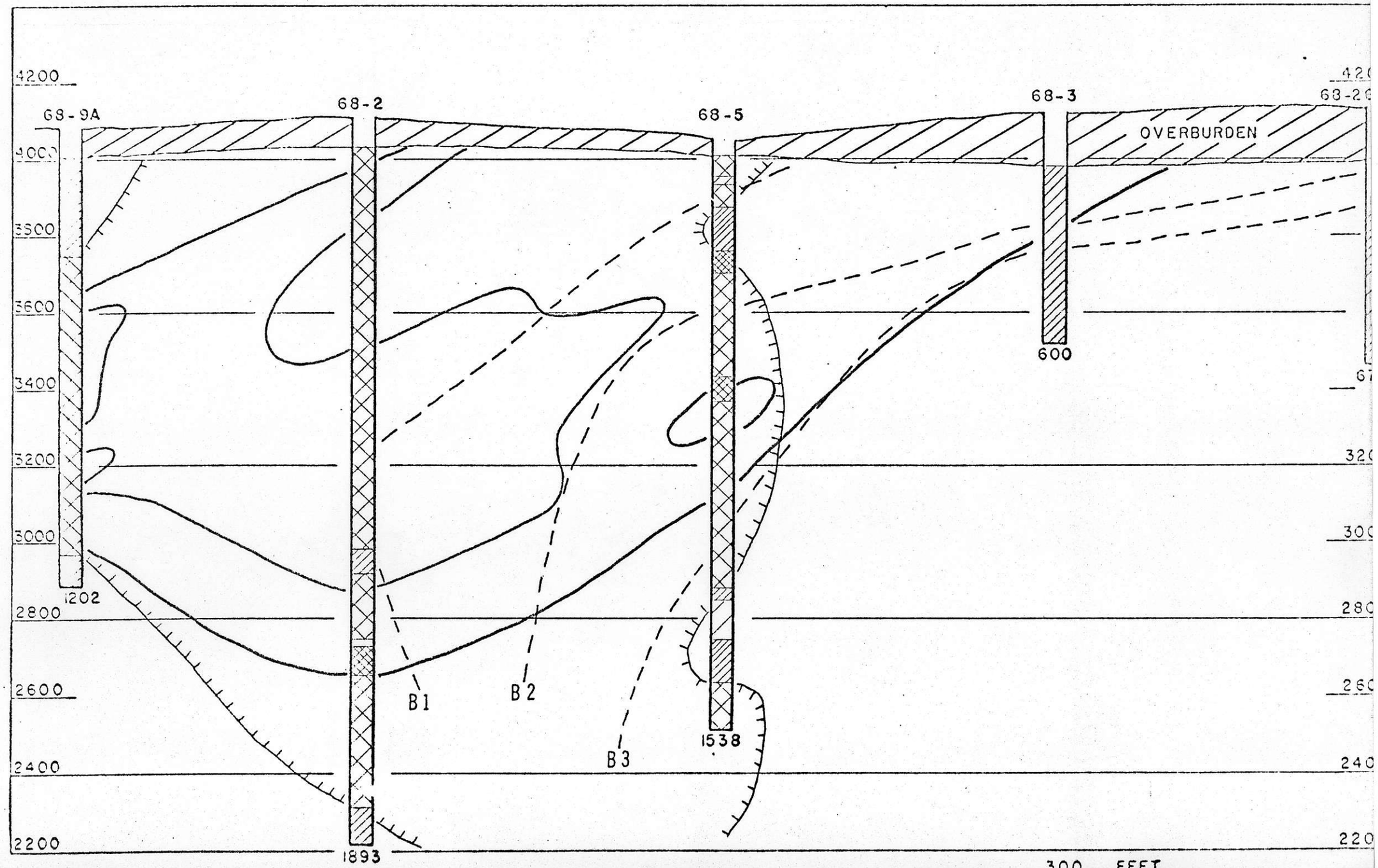

AZIMUTH 134° 55'

Figure 7c.

SCALE 300 FEET

SECTION 12 SULFIDE DISTRIBUTION

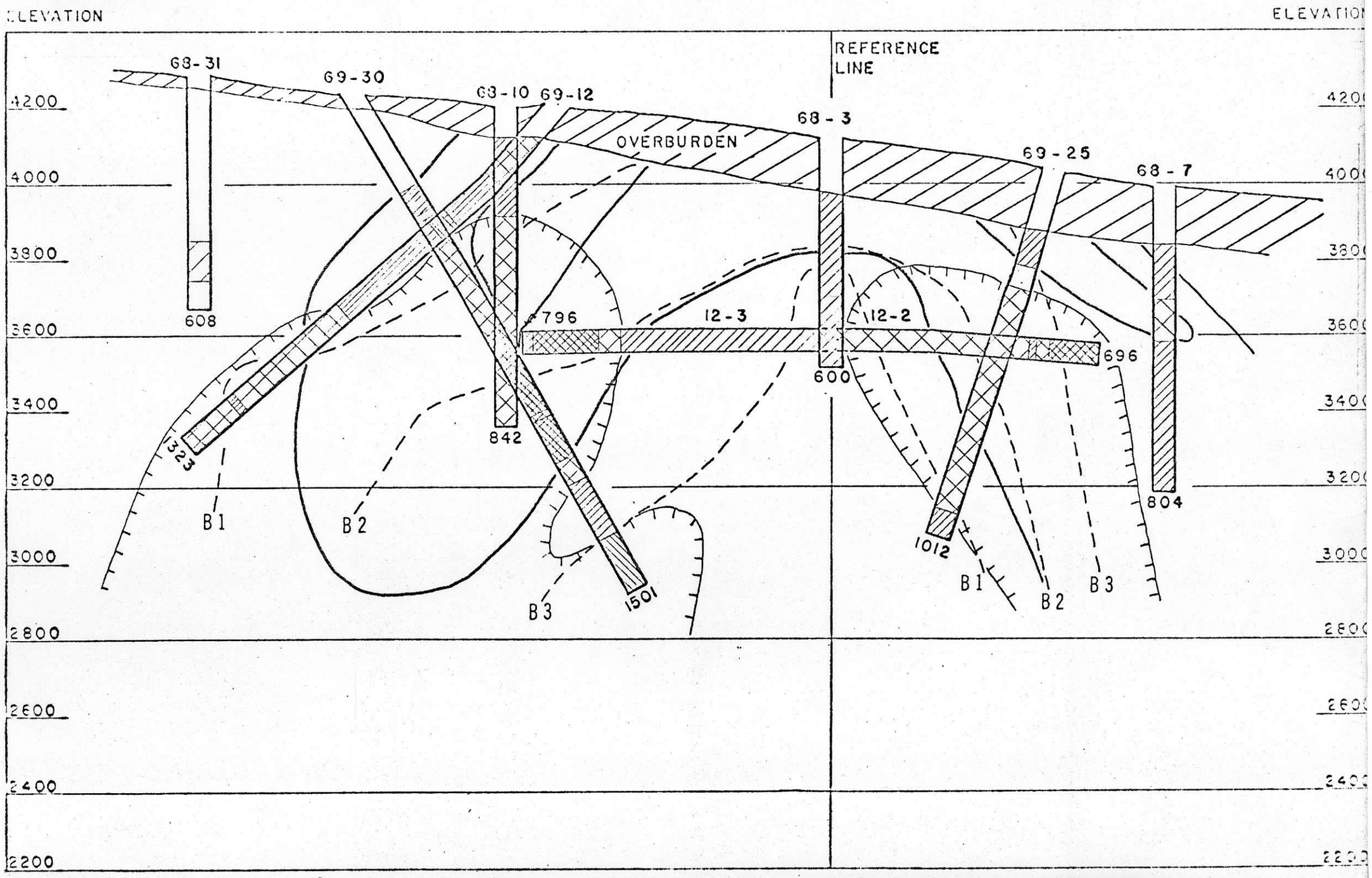

AZIMUTH 44° 55'

Figure 7e.

SCALE 300 FEET