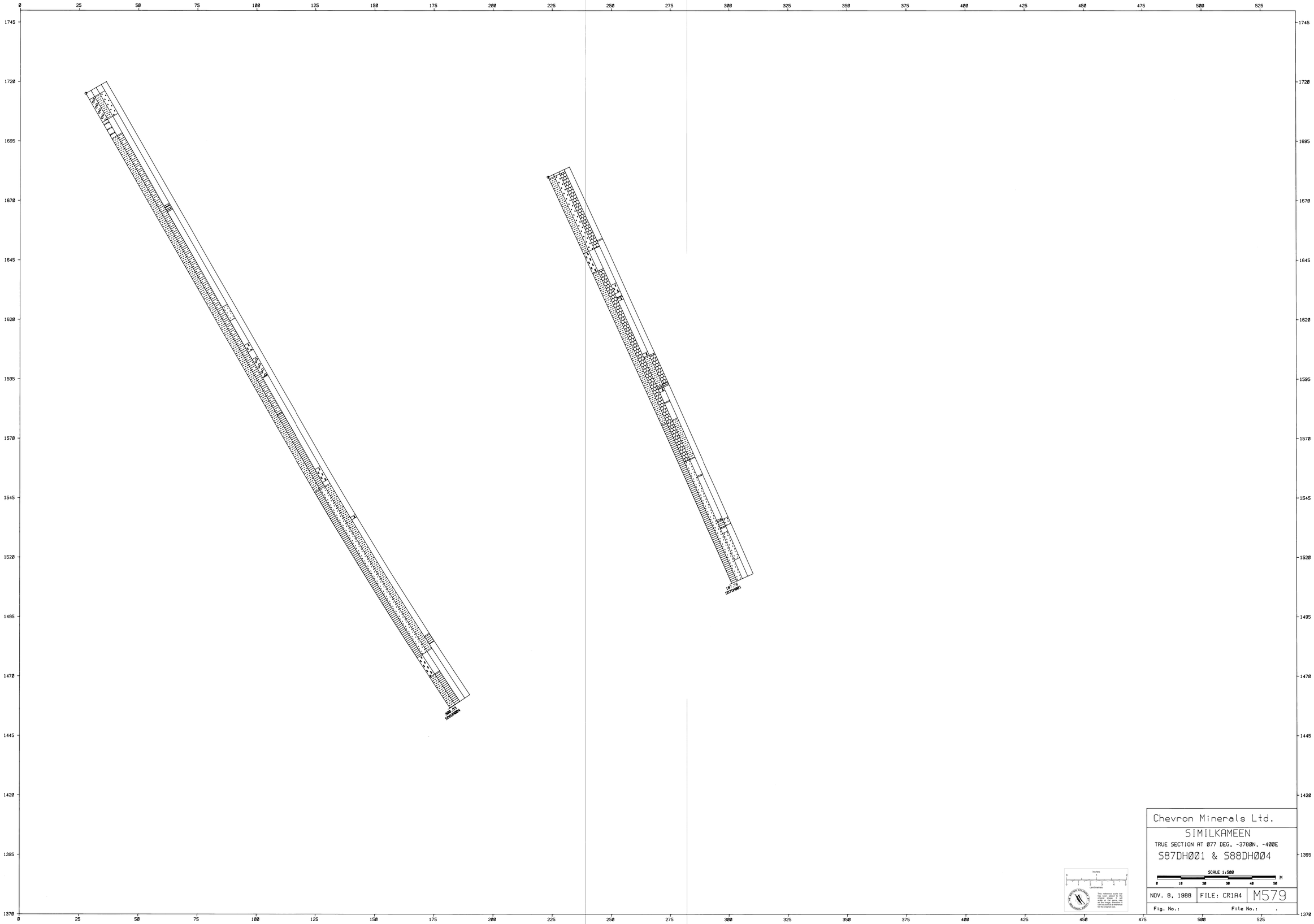
Chevron Minerals Ltd.
SIMILKAMEEN
TRUE SECTION AT 077 DEG. -3780N. -400E
S87DH001 & S88DH004
SCALE 1:500
M
NOV. 8, 1988
FILE: CR1A4
M579
Fig. No.:
File No.:

843075